BER-VAC

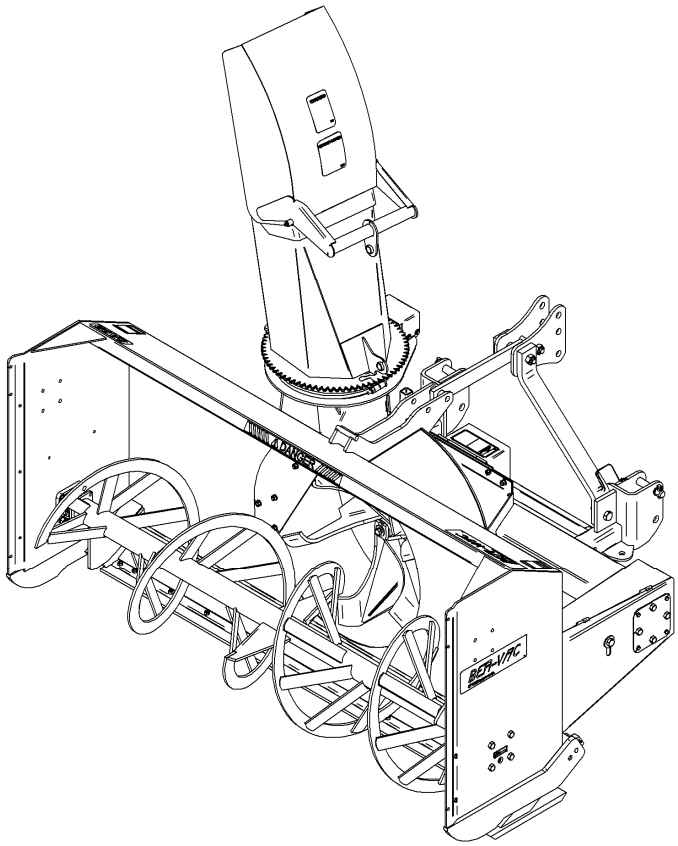

OPERATOR'S AND PARTS MANUAL

TWO STAGE SNOWBLOWERS MODELS SA92A and SA98A

SERIAL NO. SOT300001 AND UP

INTERTEK ISO 9001:2000

OM 0365SB-A
01/14

TABLE OF CONTENT

INTRODUCTION – TO THE PURCHASER 3

SAFETY PRECAUTIONS 4
- Before Operation 4
- Notice 5
- The Snowblower 5
  - Before Operation 5
  - Snowblower operation 6
  - Stay Clear of Rotating Drivelines 7
- The Tractor 8-9
  - General Information 8
  - Operating the Tractor 8
  - During Operation 8
  - Roll-Over Protective Structure (ROPS) 9
  - Transport 9
- Maintenance 10
- Storage 10

DECALS 11

ASSEMBLY 12-22
- Snowblower Assembly 12
  - Three Point Hitch Installation 12-13
  - Snowblower Installation 14
  - Installation of the Snowblower with Quick Hitch 15
  - How to Determine Driveline Angles 16
  - Angles at Each End of Driveline 17
  - Determining Driveline Length 17-18
  - Chute Installation 19-20
  - Hydraulic Rotation by Motor – 8164B & BER0030 21
  - Driveline Installation 22
  - Removing Snowblower from Tractor 22

OPERATION 23-25
- General Preparation 23
- Operating Controls 23
  - Deflector Adjustment 23
  - Raising and Lowering the Snowblower 23
  - Work and Travel Speed 23
  - Drive Shaft Operation 23
  - Skid Shoes Adjustment 23
  - Chain Idler adjustment 24
- Snow Removal Methods 25

TABLE OF CONTENT

MAINTENANCE 26-31
Maintenance 26
Shearbolts 26
Drive Shaft 26
Driveline 26
Lubrication 27-28
Driveline Troubleshooting 29-31

PARTS 32-45
Introduction 32
Chain Idler 33
Snowblower SA92 & SA98 - Front 34-35
Snowblower SA92 & SA98 – Rear 36-37
Three Point Hitch 38-39
Standard Chute - 8247 & 8247A 2009 & less, 2010 & up 40
Semi-industrial Chute – 8169B 2009 & less 41
Semi-industrial Chute – 8169C 2010 & up 42
Hydraulic Rotation by Motor – 8164B & BER0030 43
Gearbox – 662281 44
Driveline - 4700151 45

AVAILABLE OPTIONS 46

WARRANTY 47

TORQUE SPECIFICATION TABLE 48

INTRODUCTION

TO THE PURCHASER

All BER-VAC and BLIZZARD products are designed to give safe, dependable service if they are operated and maintained according to instructions. **Read and understand this manual before operation.**

This manual has been prepared to assist the owner and operators in the safe operation and suitable maintenance of the implements. The information was applicable to products at the time of manufacture and does not include modifications made afterwards.

Read and understand this operator's manual before attempting to put an implement into service. Familiarize yourself with the operating instructions and all the safety recommendations contained in this manual and those labeled on the implements and on the tractor. Follow the safety recommendations and make sure that those with whom you work follow them.

Illustrations

The illustrations may not necessarily reproduce the full detail and the exact shape of the parts or depict the actual models, but are intended for reference only

Direction Reference

Right Hand and Left Hand are determined by those seen by the conductor standing behind the equipment.

The Dealer is responsible for warranty registration of the unit you have purchased. To assist your dealer in handling your needs, please record hereafter the model number and serial number of your implement and tractor. It is also advisable to supply them to your insurance company. It will be helpful in the event that an implement or tractor is lost or stolen.

MODEL : _____

SERIAL NUMBER : _____

DATE OF PURCHASE : _____

SAFETY PRECAUTIONS

SAFETY FIRST

This symbol, the industry's "Safety Alert Symbol", is used throughout this manual and on labels on the machine itself to warn of the possibility of personal injury. Read these instructions carefully. It is essential that you read the instructions and safety regulations before you attempt to assemble or use this unit.

DANGER : Indicates an imminently hazardous situation which, if not avoided, will result in death or serious injury.

WARNING : Indicates a potentially hazardous situation which, if not avoided, could result in death or serious injury.

CAUTION : Indicates a potentially hazardous situation which, if not avoided, may result in minor or moderate injury.

IMPORTANT : Indicates that equipment or property damage could result if instructions are not followed.

NOTE : Gives helpful information.

All products are designed to give safe, dependable service if they are operated and maintained according to instructions. **Read and understand this manual before operation**. It is the owner's responsibility to be certain anyone operating this product reads this manual, and all other applicable manuals, to become familiar with this equipment and all safety precautions. Failure to do so could result in serious personal injury or equipment damage. If you have any questions, consult your dealer.

BEFORE OPERATION

Children and Bystanders

Tragic accidents can occur if the operator is not alert to the presence of children. Children are generally attracted to machines and the work being done. Never assume children will remain where you last saw them.

1. Keep children out of the operating area and under the watchful eye of another responsible adult.
2. Be alert and turn machine off if children enter the work area.
3. Before and when backing, look behind and look for small children.
4. Never carry children while operating the machine. They may fall off and be seriously injured or interfere with safe operation of the machine.
5. Never allow children to play on the machine or attachment even when turned off.
6. Never allow children to operate the machine even under adult supervision.
7. Use extra care when approaching blind corners, shrubs, trees, or other obstructions that might hide children from sight.

NOTICE

A safe operator is the best insurance against accidents. All operators, no matter how experienced they may be, should read this Operator's Manual and all other related manuals before attempting to operate an implement. Please read the following section and pay particular attention to all safety recommendations contained in this manual and those labeled on the implements and on the tractor.

THE SNOWBLOWER

Before Operation

1. Read and understand this operator's manual and tractor operator's manual. Know how to operate all controls and how to stop the unit and disengage the controls quickly.

2. Never wear loose, torn, or bulky clothing around the tractor and implement. It may catch on moving parts or controls, leading to the risk of accident.

3. Before the snow season, thoroughly inspect the area where the equipment is to be used and remove all doormats, sleds, boards and other foreign objects.

4. Disengage clutch and shift into neutral before starting the engine.

5. Do not operate equipment in wintertime without wearing adequate winter garments.

6. Never attempt to make any adjustments while engine is running. Read this manual carefully to acquaint yourself with the equipment as well as the tractor operator's manual. Working with unfamiliar equipment can lead to accidents. Be thoroughly familiar with the controls and proper use of the equipment. Know how to stop the unit and disengage the controls quickly.

7. Keep all shields in place and properly tighten all mounting hardware.

8. Periodically, inspect all moving parts for wear and replace with authorized service parts if an excessive amount of wear is present.

9. Replace all missing, illegible, or damaged safety and warning decals. See list of decals in the operator's manual.

10. Do not modify or alter this equipment or any of its components, or any equipment function without first consulting your dealer.

11. Keep safety decals clean of dirt and grime.

12. Make sure the tractor is counterweighted as recommended by your dealer. Weights provide the necessary balance to improve stability, traction and steering.

Snowblower Operation

1. Before leaving the tractor/snowblower unattended, take all possible precautions. Park the tractor/snowblower on level ground, place the transmission in neutral, set the parking brake, disengage the PTO, lower the snowblower to the ground, place all levers including auxiliary control levers in neutral, shut off the engine and remove the ignition key.

2. Before starting the tractor/ snowblower, remove the ice that might have accumulated on the auger/fan, inspect and clean every rotating part.

3. Prior to operation, clear work area of all objects that can be picked up and thrown. Mark all curbs, pipes, etc. that cannot be moved.

4. Be sure the PTO switch/lever is in OFF/disengaged position before starting engine.

5. Exercise extreme caution when operating on or crossing a gravel drive, walks, or roads. Stay alert for hidden hazards or traffic.

6. Do not carry passengers.

7. Keep clear of all rotating parts. Do not put hands or feet under, or into snowblower with engine running. Be especially observant of the snowblower areas of discharge, intake or all other mechanical motions.

8. For your safety, do not work under any hydraulically supported machine elements that may creep down, suddenly drop or be accidentally lowered.

9. Park the tractor/snowblower on level ground, place the transmission in neutral, set the parking brake, disengage the PTO, lower the snowblower to the ground, place all control levers in neutral, shut off the engine, remove the ignition key and allow the rotating parts to stop BEFORE unclogging the housing or the chute and making any repairs, adjustments or inspections. Use only a 36" long stick of wood to unclog the snowblower.

10. If the snowblower starts to vibrate abnormally, disengage the PTO, stop the engine immediately and check for cause. Excessive vibration is generally a sign of trouble.

11. Do not run the engine indoors except when starting engine and transporting attachment in or out of building. Carbon monoxide gas is colorless, odorless and deadly.

12. Do not attempt to operate on steep slopes. If operating on slopes is necessary, exercise extreme caution when changing direction.

13. Never operate snowblower without guards, and other safety protective devices in place. All tractor and snowblower shields and covers must be correctly installed at all times. When necessary to remove these, they must be reinstalled immediately.

14. Never operate snowblower near glass enclosures, automobiles, window wells, embankments, etc., without proper adjustment of snow discharge angle.

15. Never operate machine at high transport speeds on a slippery surface.

16. Use extra caution when backing up.

17. Disengage power to auger/fan when transporting or when not in use.

18. Never operate the snowblower without good visibility and lighting.

19. Prolonged exposure to loud noise can cause impairment or loss of hearing. Wear a suitable hearing protective device such as earmuffs or earplugs to protect against objectionable or uncomfortable noises.

20. Never allow anyone near the work area.

21. Never allow anyone to operate the snowblower until they have read the manual completely and are thoroughly familiar with basic tractor and snowblower operation.

22. Make sure the tractor is counterweighted as recommended by your dealer. Weights provide the necessary balance to improve stability, traction and steering.

23. Always make sure all snowblower components are properly installed and securely fastened BEFORE operation.

24. Adjust housing height to clear gravel or crushed rocks surface.

25. Keep away from chute discharge. This chute has the capacity to throw debris at far distances.

26. Never direct chute discharge towards people or animals. A thrown debris can cause serious injury.

Stay Clear of Rotating Drivelines

1. Entanglement in rotating driveline can cause serious injury or death.
2. Keep tractor master shield and driveline shields in place at all times. Make sure rotating shields turn freely.
3. Wear close fitting clothing. Stop the engine and be sure that PTO driveline is stopped before making adjustments, connections, or cleaning out PTO driven equipment.
4. Do not install any adapter device between the tractor and the primary implement PTO drive shaft that will allow a 1000 rpm tractor shaft to power a 540 rpm implement at speeds higher than 540 rpm.
5. Do not install any adapter device that results in a portion of the rotating implement shaft, tractor shaft, or the adapter to be unguarded. The tractor master shield shall overlap the end of the splined shaft and the added adaptor device as outlined in the table.

PTO Type	Diameter	Splines	n ± 5 mm (0.20 in.)
1	35 mm (1.378 in.)	6	85 mm (3.35 in.)
2	35 mm (1.378 in.)	21	85 mm (3.35 in.)
3	45 mm (1.772 in.)	20	100 mm (4.00 in.)

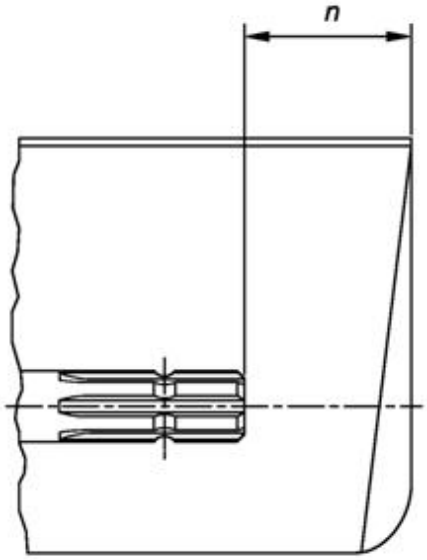

THE TRACTOR

General Information

1. Read the operator's manual carefully before using tractor. Lack of operating knowledge can lead to accidents.
2. Do not allow anyone but the operator to ride on the tractor. There is no safe place for extra riders

Operating the Tractor

1. Never run the tractor engine in a closed building without adequate ventilation, as the exhaust fumes are very dangerous.
2. Never allow an open flame near the fuel tank or battery.
3. Make sure the shield is installed when using a PTO-driven equipment and always replace the shield if damaged.
4. Always bring the tractor to a complete stop, shut off the engine, lower the implement to the ground and remove the ignition key before leaving the tractor.
5. Never park the tractor on a steep slope.
6. Do not attempt to operate on steep slopes.
7. Use of tire chains for better traction and stability is recommended.
8. Always drive the tractor at speeds compatible with safety, especially when operating over rough ground, crossing ditches, or when turning.
9. Handle fuel with care, as it is highly flammable.
10. Use approved fuel container.
11. Never add fuel to a running engine or a hot engine.
12. Fill fuel tank outdoors with extreme care. Never fill fuel tank indoors. Replace fuel cap securely and wipe up spilled fuel.
13. Never allow anyone to operate the snowblower until they are thoroughly familiar with basic tractor and snowblower operation.
14. A minimum 20% of tractor and equipment weight must be on the tractor front wheels when attachments are in transport position. Without this weight, tractor could tip over, causing personal injury or death. The weight may be attained with a loader, front wheel weights, ballast in tires or front tractor weights. Weigh the tractor and equipment. Do not estimate.
15. Always make sure all snowblower components are properly installed and securely fastened BEFORE operation.

During Operation

1. Do not allow anyone to ride on the tractor/snowblower at any time. There is no safe place for passengers on this equipment. The operator MUST sit in the tractor seat.
2. Eye and hearing protection is recommended when operating the snowblower.
3. Operate only during daylight hours, or when the area is well lit with bright artificial light.
4. Disengage the PTO (turn to “OFF”), place the transmission in neutral, set the parking brake, shut off the engine and remove the key, and make sure rotating components have stopped BEFORE leaving the operator’s seat.
5. Inspect the snowblower after striking any foreign object to assure that all snowblower parts are safe and secure and not damaged.

Roll-Over Protective Structure (ROPS)

1. DO NOT weld, drill or alter the ROPS. Damaged ROPS must not be straightened or used. If damage does occur, consult your dealer.

2. If the ROPS is lowered or removed from the tractor for any reason, it must be erected and/or refitted immediately. Original bolts or equivalent replacements must be used and tightened to the correct torque.

3. Your dealer does not recommend usage of tractor with ROPS removed.

4. If a fold-down ROPS is used, the ROPS can be folded down for storage, but it must be pinned in the upright position prior to operation.

5. Seat belt usage: With ROPS installed on the tractor it is imperative that the seat belt be installed, used and correctly adjusted, at all times. DO NOT use a seat belt if operating without ROPS.

Additional Safety Equipment

Keep a fire extinguisher and a first aid kit within reach.

TRANSPORT

1. If the tractor/snowblower is to be driven on public roads, it must be equipped with an SMV (Slow Moving Vehicle) sign. Check local traffic codes that may apply to unit usage on public roads and highways in your area.

2. Be alert for all other traffic when driving the tractor/snowblower on public roads or highways.

3. Always disengage the snowblower before transport.

MAINTENANCE

ALWAYS USE GENUINE PARTS WHEN REPLACEMENT PARTS ARE REQUIRED

1. Keep the tractor and snowblower properly maintained.
2. Park the tractor/snowblower on level ground, place the transmission in neutral, set the parking brake, disengage the PTO, lower the snowblower to the ground, place all control levers in neutral, shut off the engine and remove the ignition key and allow the rotating parts to stop BEFORE making any snowblower adjustments.
3. To avoid injury, do not adjust, unblock the driving system, or service the snowblower with the tractor engine running. Make sure rotating components have completely stopped BEFORE leaving the operator's seat.
4. Keep the tractor/snowblower clean. Snow, dirt or ice build-up can lead to malfunction or personal injury from thawing and refreezing in garage.
5. Always wear eye protection when cleaning or servicing the snowblower.
6. DO NOT service the tractor while the engine is running or hot, or if the unit is in motion. Always lower snowblower to the ground. If necessary to service snowblower in raised position, securely support with stands or suitable blocking before working underneath. Do not rely on hydraulically supported devices for your safety. They can settle suddenly, leak down, or be accidentally lowered.
7. Do not attempt to service machine, clear obstructions or unclog the snowblower with the engine running. Always shut off engine and allow all motion to cease.
8. The manufacturer will not claim responsibility for fitment of unapproved parts and/or accessories and any damages as a result of their use.
9. Make sure all shields and guards are securely in place following all service, cleaning, or repair work.
10. Do not modify or alter this snowblower or any of its components or operating functions. If you have questions concerning modifications, consult with your dealer.
11. Do not operate a snowblower that is defective or has missing parts. Make sure that all recommended maintenance procedures are completed before operating the snowblower.
12. Check all controls regularly and adjust where necessary. Make sure that the brakes are evenly adjusted.
13. Periodically check all nuts and bolts for tightness, especially wheel hub and rim nuts.
14. To avoid serious personal injury: Escaping hydraulic/diesel fluid under pressure can penetrate the skin causing serious injury. Do not use your hands to check for leaks. Use a piece of cardboard or paper to search for leaks. If you are injured by escaping high pressure fluid, see a medical doctor at once.
15. Stop engine and relieve pressure before connecting or disconnecting hydraulic hoses. Tighten all connections before starting engine or pressurizing hoses.

STORAGE

1. Before storing the snowblower, certain pre-cautions should be taken to protect it from deterioration.
2. Clean the snowblower thoroughly.
3. Make all the necessary repairs.
4. Replace all Safety Signs that are damaged, lost, or otherwise become illegible. If a part to be replaced has a sign on it, obtain a new safety sign from your dealer and install it in the same place as on the removed part.
5. Repaint all parts from which paint has worn or peeled.
6. Lubricate the snowblower as instructed under "Lubrication" section.
7. When the snowblower is dry, oil all moving parts. Apply oil liberally to all surfaces to protect against rust.
8. Attach driveline shield safety chain around driveline by passing it over the upper hitch.
9. Store in a dry place.

DECALS

Replace Immediately If Damaged.

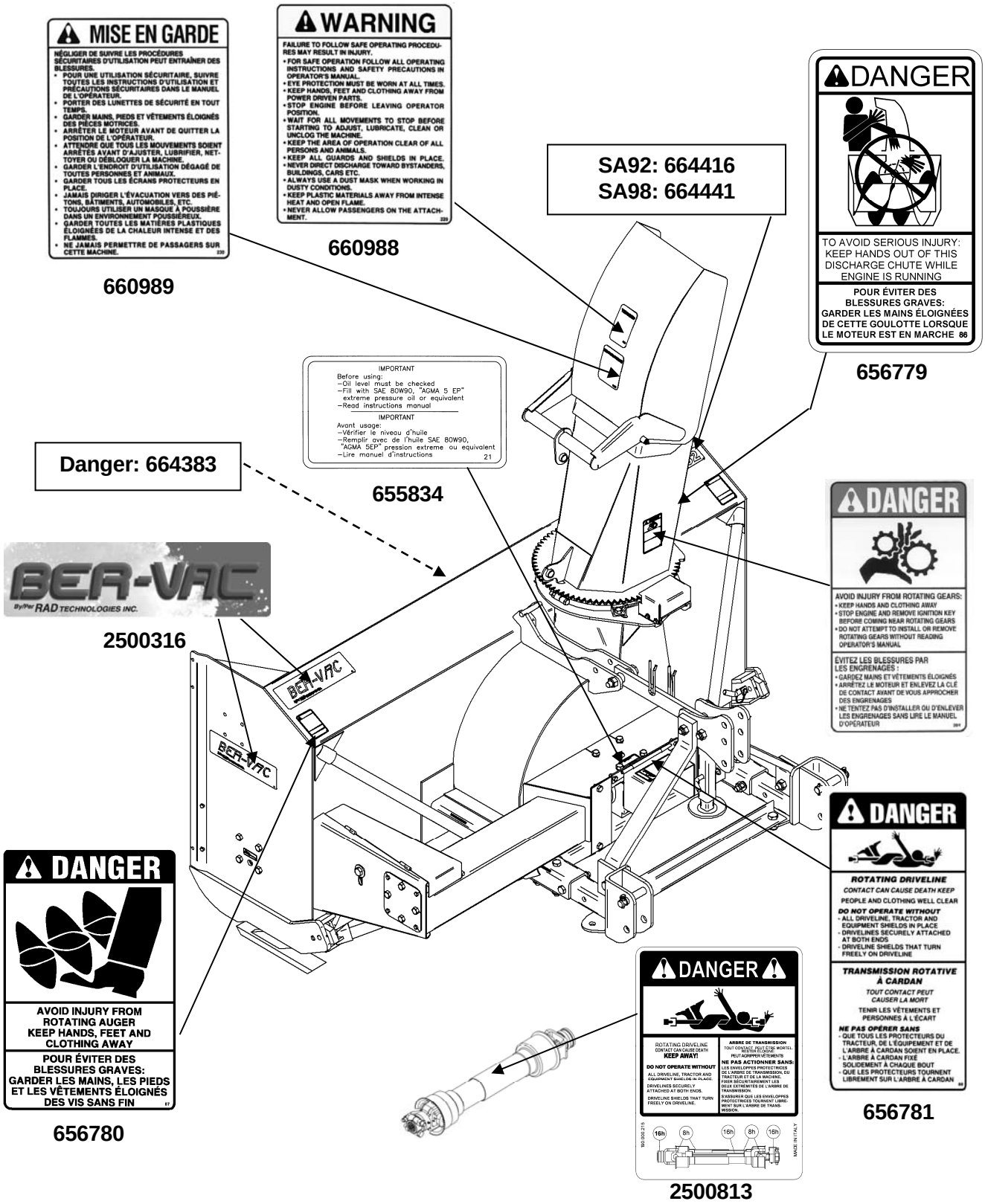

ASSEMBLY

SNOWBLOWER ASSEMBLY

The snowblower is assembled at the factory however snowblower kits must be assembled. Use the present manual and lay out all parts for assembly. Separate bolts and nuts into various sizes. After assembly, torque all the bolts according to the Torque Specification Table enclosed at the end of the manual.

Three Point Hitch Installation

(Figure 1A for Cat. 2 et Figure 1B for Cat. 3)

NOTE: Pay particular attention to the position of the lower hitches. The overhang of the bent section must be on the outside for Cat. 2 and on the inside for Cat. 3.

1. Install the lower left hitch and lower right hitch (items 1-2) on snowblower using two reinforcement plates (item 3) under the lower hitches and secure with six 3/4"NC x 5 1/2" bolts, 3/4" lockwashers and nuts (items 4-5-6).

NOTE: The hitches have two holes to adjust the distance between the tractor and the snowblower.

2. Install the hitches (items 7-8) to the lower hitches (items 1-2) as illustrated. Secure with two 7/8" NC x 3" bolts and 7/8" stover nuts (items 9-10).
3. Fasten each hitch (items 7-8) to the upper hitch (item 11) using a 7/8" NC x 7" bolt and a 7/8" stover nut (items 12-15) as well as the bushing (item 20) with a 7/8" NC x 5" bolt and a 7/8" stover (items 14-15).
4. Attach the upper hitch (item 11) to the snowblower as illustrated using a 7/8" NC x 5" bolts and a 7/8" hex. nut (items 14-15).
5. Install the brace (item 16) under the lower hitches (items 1-2) with two 7/8" NC x 2" bolts (item 17), lockwashers and nylon insert nuts (items 18-19).
6. Tighten all bolts according to the ***"Torque Specification Table"*** at the end of the manual.
7. Attach the hose support (item 21) to the upper hitch (item 11) with two 5/16" NC x 1 1/2" serrated flange bolts and two serrated flange nuts (items 25-26).
8. Install the two hose clamps (item 22) on the hose support (item 1) with two 3/8" NC x 1 1/2" bolts and two 3/8" NC nylon insert nuts (items 23-24). Do not tighten immediately.

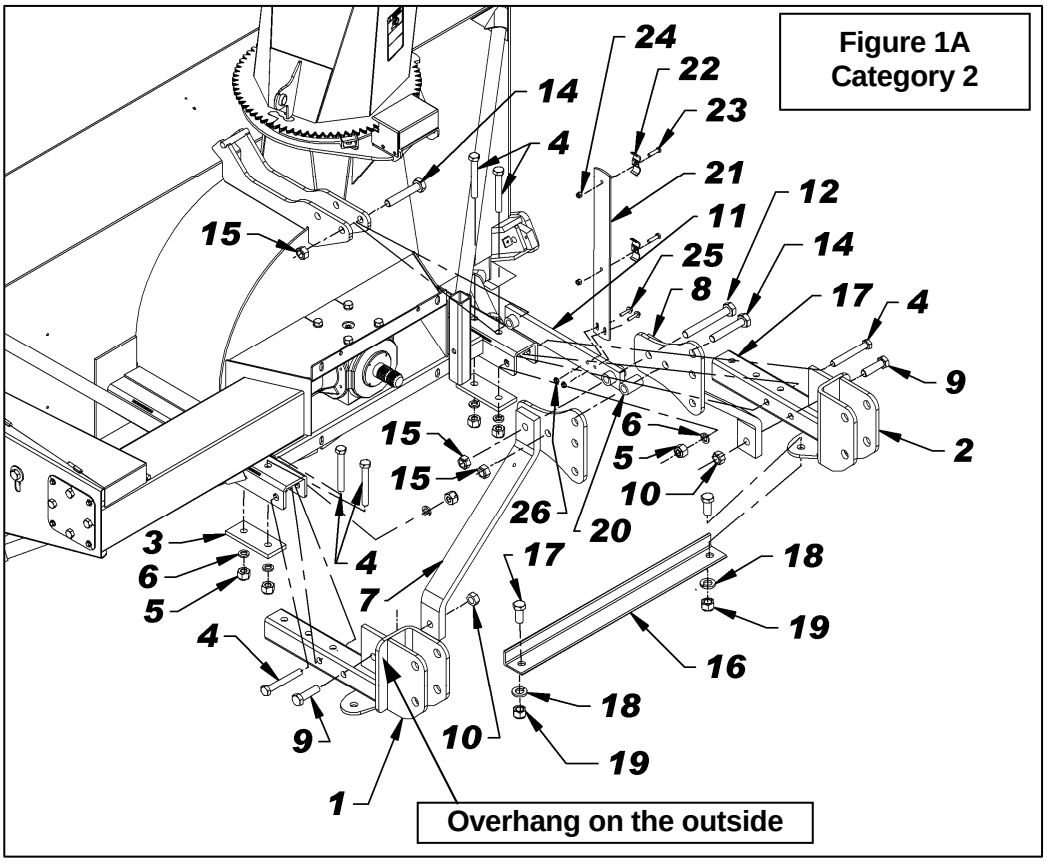

Figure 1A
Category 2

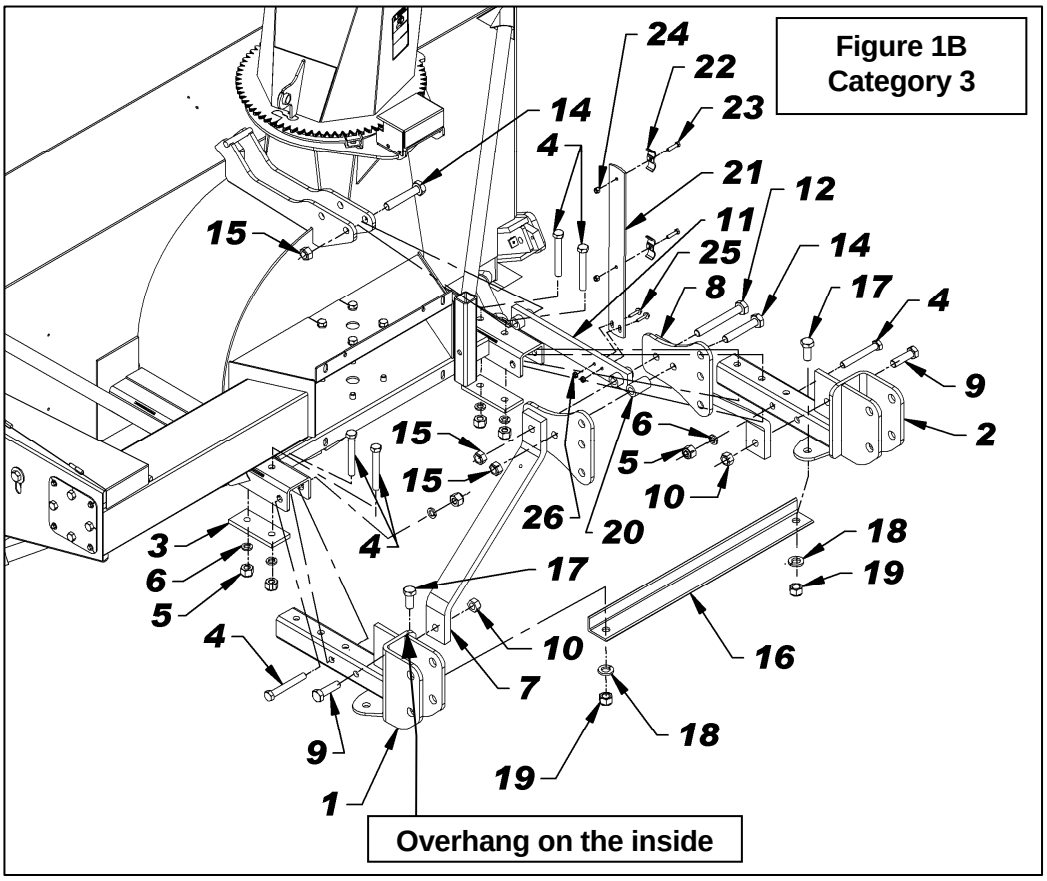

Figure 1B
Category 3

Snowblower Installation

(Figure 2)

1. Attach the tractor hitch arms (item 1) in the bottom holes of the snowblower lower hitches (item 7) using the pins and linchpins (items 6-2).
2. Install the tractor adjustable arm (item 3) in the correct hole of the snowblower attaching plates (item 5) using the tractor pins (item 5).
   - **Cat. 3:upper hole 5A**
   - **Cat. 2: middle hole 5B**
3. To level snowblower front to back, adjust using the tractor adjustable arm (item 3).
4. To level side to side, use leveling crank on right lower lift arm.
5. Set the tractor anti-sway turnbuckles so the snowblower does not sway. Be sure the turnbuckles clear the tractor tires.

WARNING: Before connecting snowblower driveline to tractor PTO, make sure driveline is not too long in raised, lowered or middle position. If the driveline is too long it must be shortened, to avoid damaged to tractor. See pages 16 to 18 for instructions.

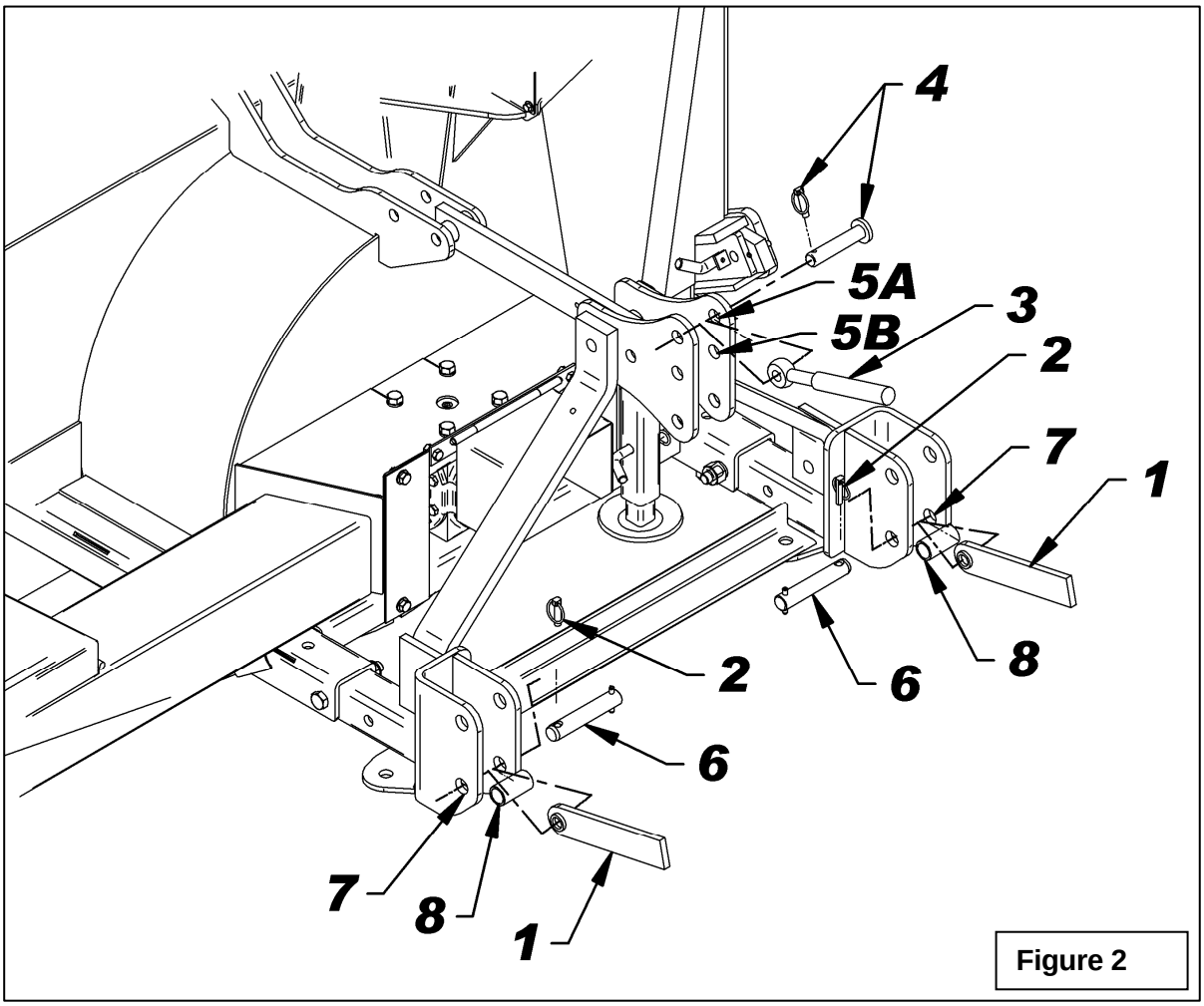

Figure 2

Installation of the Snowblower with Quick Hitch

(Figures 3A-3B)

1. Install the Ø1 1/8" Cat. 2 pins (item 2) in the upper holes by inserting a bushing (item 3, not supplied) between each lower hitch plates and fasten with the linchpins (item 4) as illustrated.
2. Install pins (item 5, not supplied) in the lower hole of the hitches inserting first a bushing (item 6, not supplied) as illustrated on figure.
3. Install the driveline.

CAUTION: Before connecting the snowblower driveline to the tractor PTO, make sure the driveline is not too long in the raised, lowered and middle positions. If the driveline is too long it must be shortened, to avoid damaging the tractor. See pages 16 to 18 for instructions.

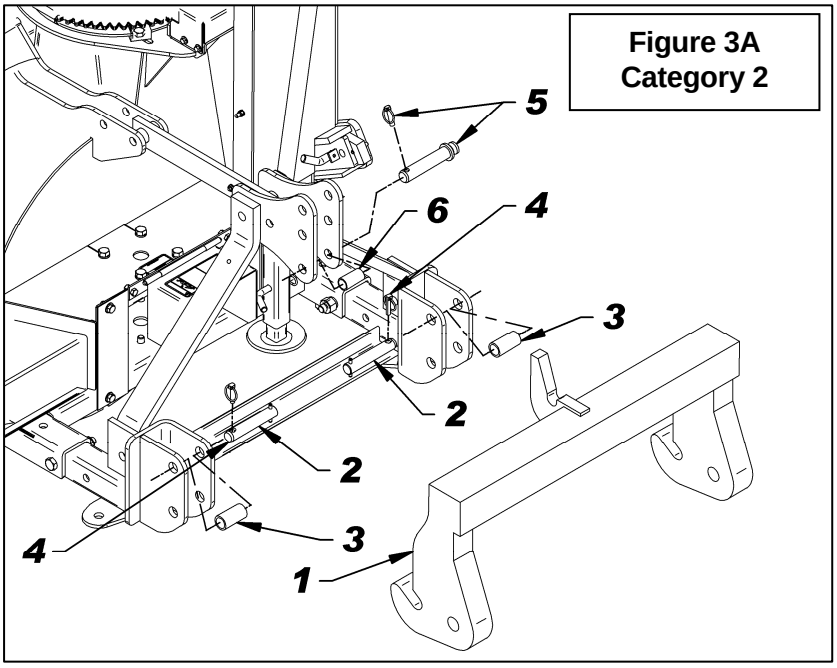

Figure 3A
Category 2

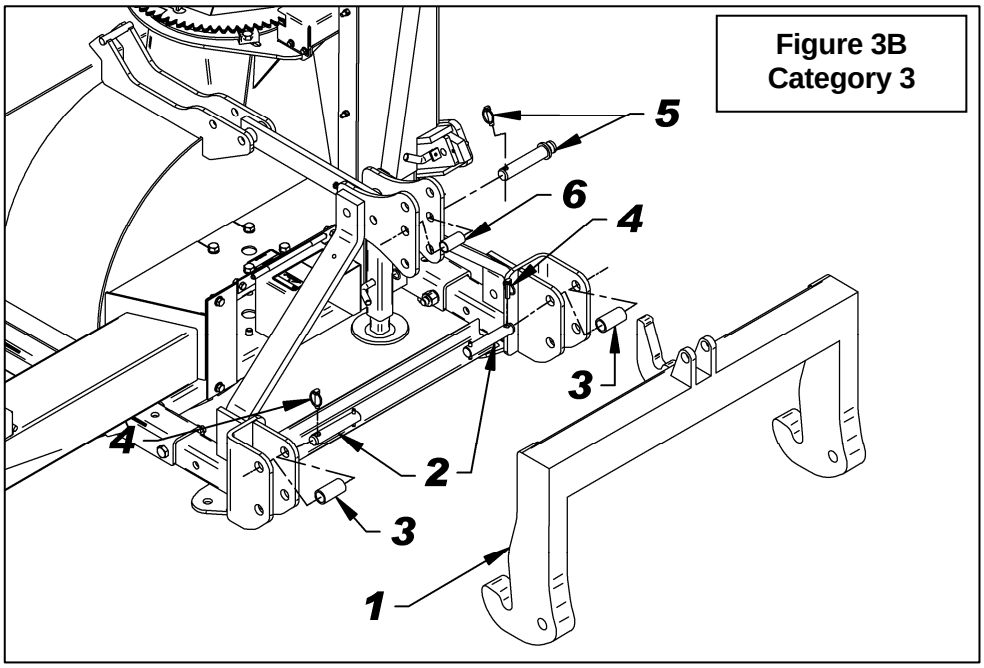

Figure 3B
Category 3

IMPORTANT:

A proper initial installation will give you years of satisfactory service on your equipment. Please read carefully following instructions that have been specially included to help you and ensure you are satisfied with your purchase.

WARNING: Unfortunately, snowblowers will be faced with forgotten or hidden objects under the snow, such as : chain, tires, stones, pieces of wood, etc. In spite of all our efforts, machines are not built to resist all those conditions.

Danger: Tractors Too Big

It is dangerous to use a tractor that is too big and powerful. The tractor will always be able to overload the blower, even if the machine is already at maximum capacity. Furthermore, tractors being very high, the driveline angles will be excessive which means the universal joints will be very vulnerable and the life of the driveline will be dramatically reduced.

How to Determine Driveline Angles

IMPORTANT: To obtain the proper universal joint angles, it is recommended to adjust the three point hitch at the furthest point from the tractor recommended by the manufacturer

The universal joint angle is directly related with the life of driveline. In order to reduce the angle, it is necessary to increase the distance between the snowblower and the tractor.

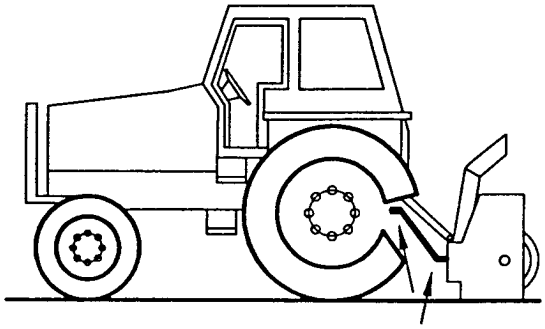

Angles of Driveline Joints Too Large Avoid

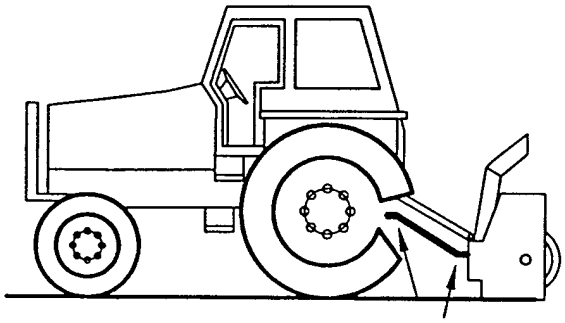

Reasonable Angles of Driveline Joints Acceptable

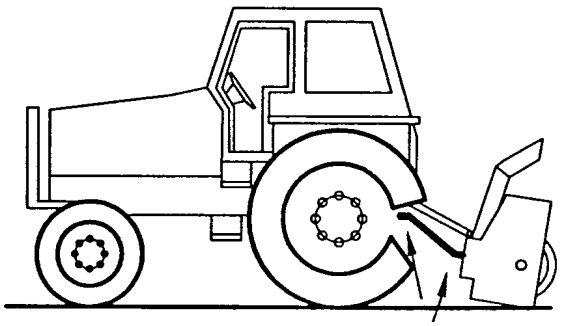

Unequal Angles at Driveline Joints
Avoid

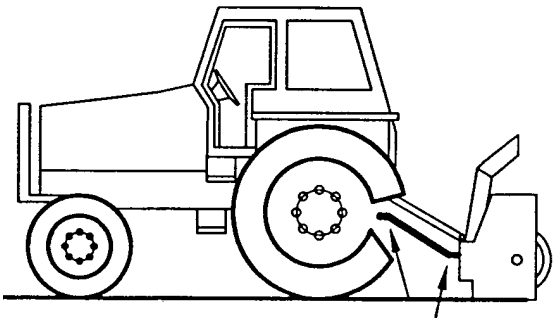

Equal Angles at Driveline Joints
Recommended

Angles at Each End of Driveline

A popular habit is to change the snowblower angle in order to obtain a better scraping effect. This practice can become harmful to the driveline since the angle at each end is unequal. This results in a fan speed variation as well as a drastic increase of load on cross and bearings. To be avoided: It is recommended to always keep tractor driveline and snowblower input shaft parallel.

Determining Driveline Length

IMPORTANT: Before using the equipment, make sure the driveline is not too long. At working position, the two half drivelines must intersect each other sufficiently to insure maximum efficiency but there must not be any interference.

1. To determine the **"L"** length for your tractor model first find the **"X"** factor (figure 4) by measuring the horizontal distance between the end of the tractor's drive shaft and the end of the snowblower's driven shaft when the snowblower is in transport position as shown on Figure 6.
2. Choose in the table below the **"Y"** factor according to the tractor category and deduct that number from **"X"** to determine **"L"** (figure 5) which is the center-to-center length between the universal joints.

Figure 4

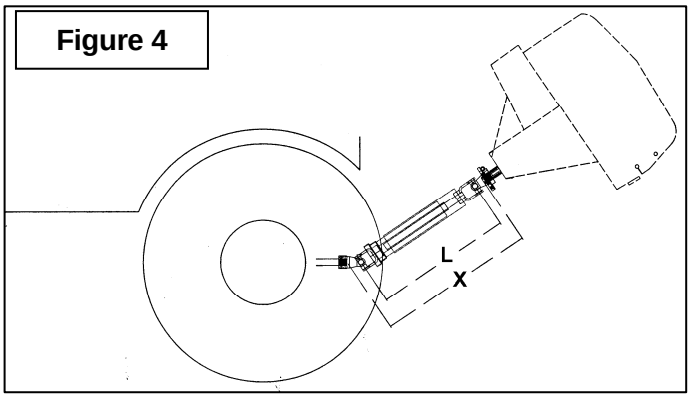

L = X – Y	
3 PTS HITCH CATEGORY	Y
Cat. 2	5 1/2"

NOTE: Before cutting, make sure the two shafts intersect by at least 7 3/4" when in working position that is when the snowblower rests on the ground.

3. Hold the two half-shaft side by side and locate the **"L"** length between the two center-to-center half-shaft universal joints. Mark off the zone to be cut on both halves opposite each half-shaft guard as shown on figure 5.
4. Cut off inner and outer guard tubes as well as the inner and outer telescopic sections.
5. Cut the guard a second time leaving the same distance between the end of the guard and the end of the shaft as existed before. To obtain the proper distance "A" shown on figure 6, cut the guard according to the following table:

DISTANCE A	
Male PTO	Female PTO
2"	1 1/2"

6. File down tubes and remove chips.
7. Apply grease to inside of outer telescopic section.

IMPORTANT: Work with fully guarded shafts only!

Figure 6

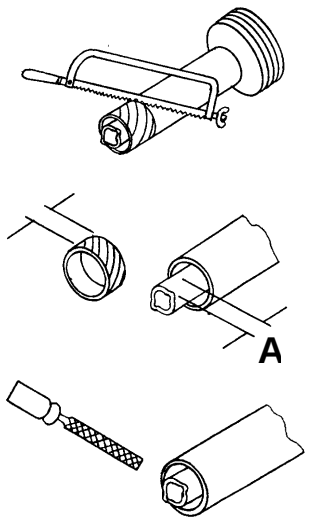

Figure 5

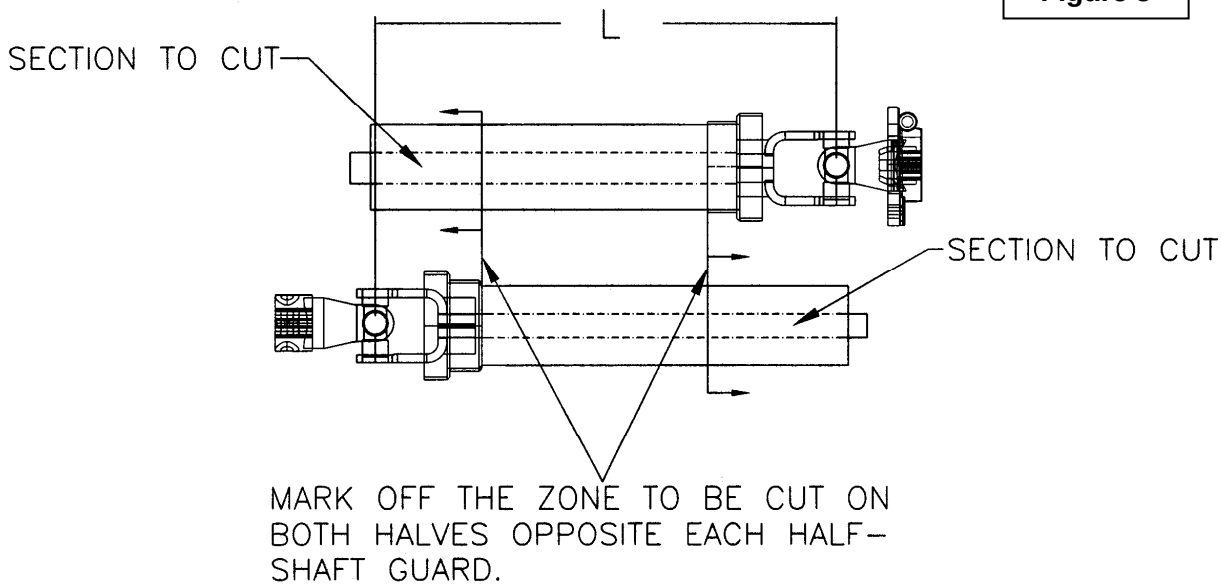

Chute Installation

(Figures 7-7a-7b-7c-7d)

1. **Figure 7:** The snowblower, as delivered. (The model may differ)
2. **Figures 7a:** Take off the retaining plate (item 8) by removing the two 5/8" x 1 1/2" bolts and 5/8" serrated flange nuts (items 1-2).
3. **Figures 7a:** Remove the rotation bushing (item 7) and the gear shield (item 3) by removing the four 5/16" x 1" bolts, the 3/8" flat washers and the 5/16" serrated flange nuts (items 4-5-6).
4. **Figure 7b:** Insert the chute (item 1) under the retaining plate (item 2) welded on the snowblower.

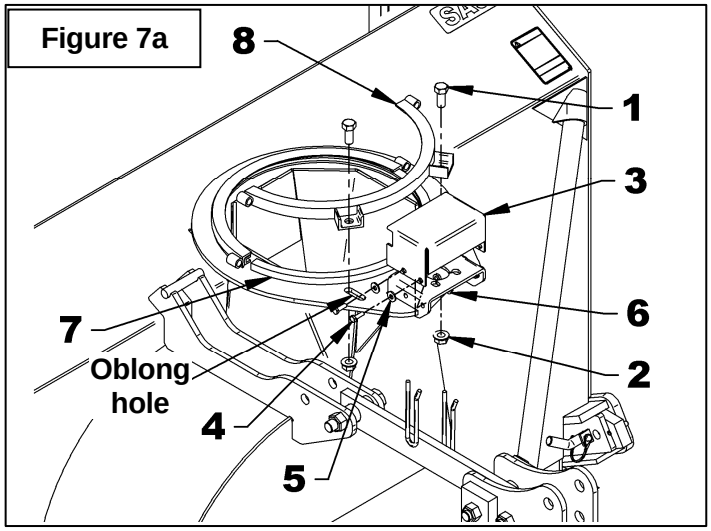

Figure 7a

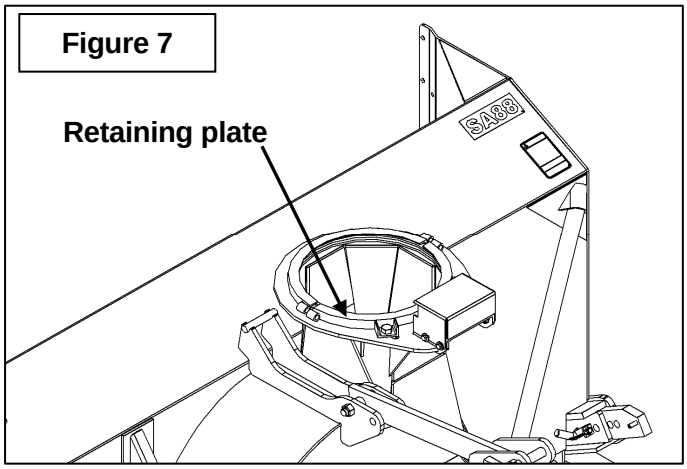

Figure 7

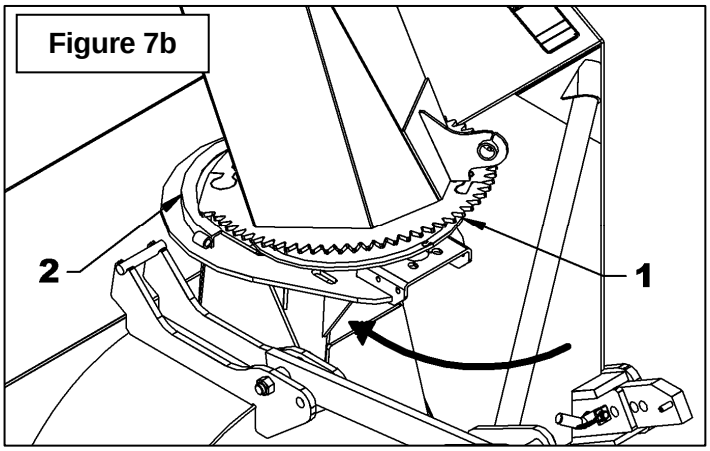

Figure 7b

5. **Figure 7c:** Raise the chute slightly, about 1/4" and wind the rotation bushing (item 1) between the welded retaining plate and the chute (item 2) by inserting it as illustrated. Fold back the rotation bushing around the chute.
6. **Figure 7d:** Install the retaining plate (item 1) on the snowblower by bending each bushing end inside the retaining plate. Align the vertical holes of the retaining plate with the oblong holes (fig.7a) and fix with the two 5/8" x 1 1/2" bolts (item 2) and 5/8" serrated flange nuts. Do not tighten.
7. **Figure 7d:** Insert two 1/2" x 3 1/4" bolts (item 3) to join together the two retaining plates. Hit slightly the two bolt heads with a hammer in alternation to bring the two retaining plates closer together. If the retaining plate moves back after hitting it, screw in the 5/8" x 1 1/2" bolts (item 2) slightly. When the bolt ends (item 3) exceed the holes enough, secure with two 1/2" nylon insert lock nut until the two retaining plates are approximately 1/4" apart.
8. **Figure 7d:** Tighten the 1/2" x 3 1/4" bolts (item 3) to reduce the gap between the retaining plates until chute turns with a slight resistance.
9. **Figure 7d:** Tighten the two 5/8" x 1 1/2" nuts (item 2) securely according to the ***Torque Specification Table*** at the end of the manual.

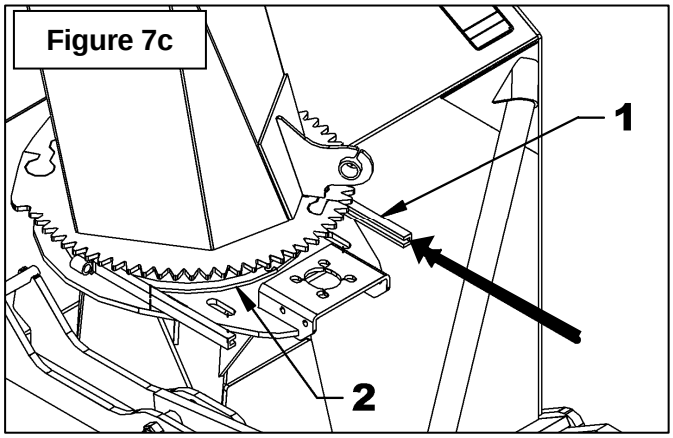

Figure 7c

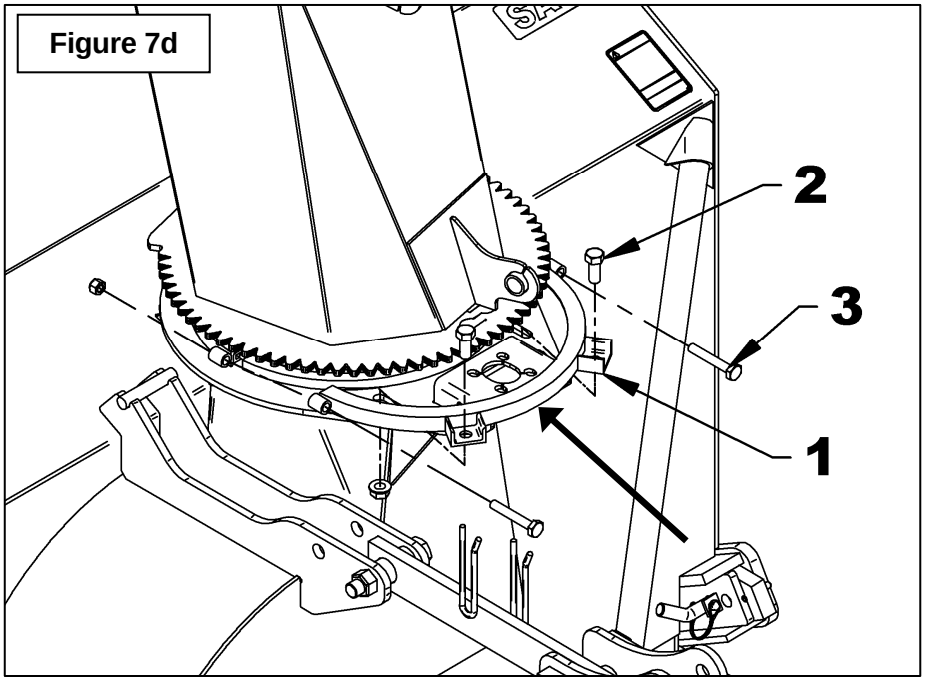

Figure 7d

Hydraulic Rotation with Gear – 8164B & BER0030 ***(Figures 8-8a-8b)***

1. **Figure 8:** Install the motor (item 1) placing the anchor plate on top (item 2) as shown on figure. Attach with four 3/8"NC x 1 1/4" (item 3) hex. bolts, lockwashers and flat washers (items 4-5). Tighten manually.
2. **Figure 8:** Install the motor gear (item 6) with the key, 8mm x 20mm bolt (item 7), lockwasher and flat washer (items 8-9). Tighten according to the ***"Torque Specification Table"*** at the end of the manual.
3. **Figure 8:** Insert the anchoring flat bar (item 10) between the anchor plate (item 2) and the motor support as shown on figure. Screw the 3/8"NC nuts (item 11) at maximum on the two 3/8"NC x 1 1/2" lg bolts (item 12). Install those two bolts (item 12) by screwing them in the anchoring flat bar (item 10).
4. **Figure 8a:** Adjust the distance between the chute gear and the motor gear according to the following step:
   - **A.** Slightly unscrew the two bolts (item 17) that hold the retaining plate.
   - **B.** Screw the two nuts (item 18) simultaneously until the distance between the retaining plates and the chute base is leveled.
   - **C.** Retighten the bolts (item 17) according to the ***"Torque Specification Table"***.
   - **D.** Adjust the gears to a distance between 1/32" and 1/16" by screwing the two bolts (item 12). Secure with the nuts (item 11) moving them against the anchoring flat bar (item 10). Tighten the four bolts (item 3) at 30 lbs-ft (41 N-M).
   - **E.** Run a test at low speed. If the gears have an irregular sound while testing, it means the adjustment is incorrect. Bring parts closer to each other until the sound becomes regular and even.
5. **Figure 8b:** Remove the gear and one of the four 3/8"NC x 1 1/4" bolts (item 3) holding the motor, apply Loctite® 243 on the bolt threads and tighten at 33 ft-lb (45 N-M). Repeat the same procedure with the other three bolts.
6. **Figure 8a:** Reinstall the gear and the cover (item 13) with four 5/16" x 1" bolts (item 14), 3/8" flat washers (item 15) on the outside and 5/16" serrated flange nuts (item 16) on the inside. Tighten according to the ***"Torque Specification Table"***.

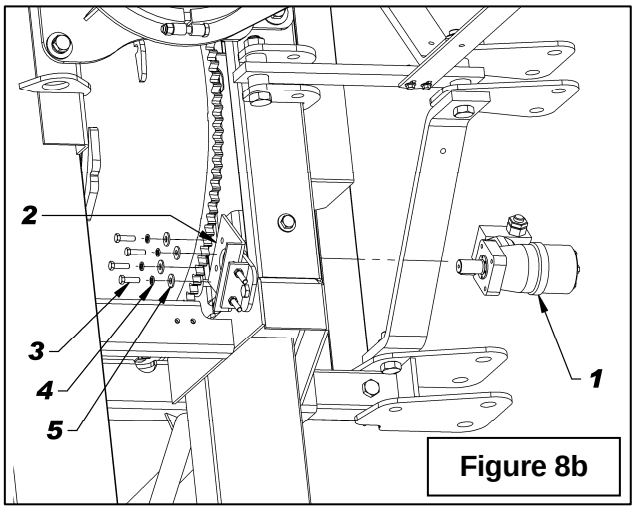

Figure 8b

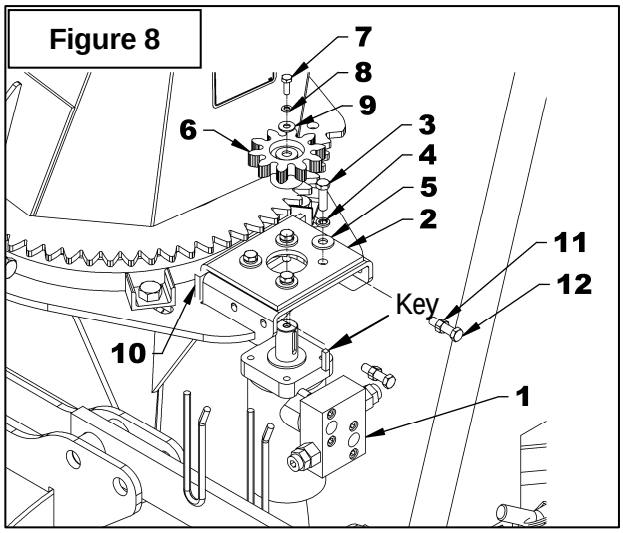

Figure 8

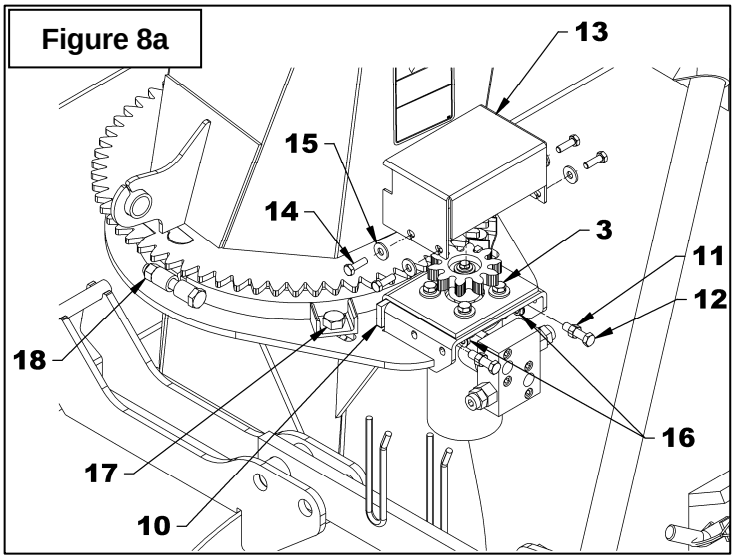

Figure 8a

Driveline Installation ***(Figure 9)***

2. Remove the paint from the gearbox shaft (item 1) and grease the driveline sliding surfaces and yoke.

3. Remove the two bolts (item 2) from the yoke and slide the driveline yoke over gearbox shaft using the sliding action of the driveline. Make sure the driveline is well secured to the drive shaft by putting back the two bolts (item 2) and tightening them according to the ***Torque Specification Table***.

6. Connect the driveline to the tractor PTO; making sure the driveline is well secured to the tractor.

7. Secure the driveline safety chain to the tractor master shield to prevent the driveline shield from rotating.

8. Before operating the snowblower, raise the parking stand from the ground.

NOTE: Depending on tractor used, it may be necessary to install front tractor weights to maintain front-end stability.

Removing Snowblower from Tractor:

Find a level surface. Lower the parking stand. Remove the driveline from the tractor PTO. Detach the top link. Detach the right lower link then detach the left lower link.

IMPORTANT: To avoid damage to the snowblower, retorque all bolts after the first 10 hours of operation.

NOTE: We recommend using the driveline chain when storing the snowblower.

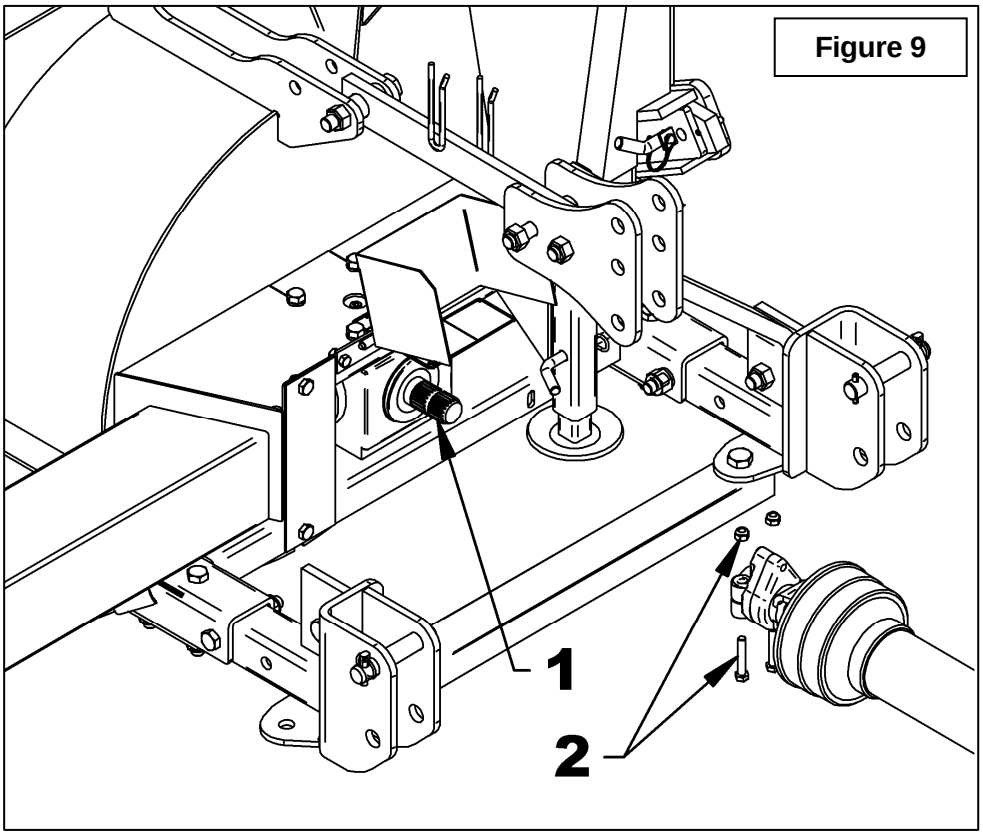

Figure 9

OPERATION

GENERAL PREPARATION

1. Read the operator's manual carefully before using the tractor and snowblower. Be thoroughly familiar with the controls and proper use of the equipment. Know how to stop the unit and disengage the controls quickly.
2. Wear adequate winter outer garments while operating equipment.
3. Make sure the snowblower is clear of snow before engaging the driveline.
4. Make sure the auger and fan operate freely.
5. Check the oil level in the worm gear box and if necessary, add SAE 80W90 gear oil, AGMA 5EP oil or equivalent.
6. Check the two shear bolts, one on the drive shaft and one on the PTO shaft for proper tightness.
7. Adjust so that the snowblower skid shoes run level.

OPERATING CONTROLS

Raising and Lowering Snowblower

Move the three point lever down or forward to lower, and up or rearward to raise.

Work and Travel Speed

Working ground speed will depend on the depth and density of the snow to be cleared. Normally, ground speed will range from 4 to 7 MPH for light, dry snowfalls 3 to 6 inches, and 1 to 3 MPH for heavy, wet or drifted snow. To transport, disengage the drive shaft and raise the snowblower to full transport height.

PTO Operation

The driveline is activated by pulling up the driveline lever on left side of seat. Push down to disengage.

ADJUSTMENTS

⚠ WARNING

To avoid personal injury, be sure the tractor engine is off, the drive shaft disengaged, and all movement has stopped before making any adjustments.

Manual Deflector Adjustment

Set the angle of deflection according to the distance the snow must be thrown. To set the deflector angle, remove the pin from the adjustment tube, adjust the deflector to the appropriate angle and replace the pin.

Skid Shoe Adjustment

Adjust the snowblower so that the skid shoes run level. Adjust the skid shoes according to the surface conditions so that stones are not thrown with the snow, and adjust upwards for smooth surfaces. Adjust both skid shoes to the same height to keep the cutting edge level.

To adjust skid shoes, remove the pins and reinsert in the hole appropriate to the surface conditions:

Clearance between cutting edge and surface:

- ***Level paved surface*:** Adjust to 1/16" to 1/8"
- ***Uneven or gravel surface*:** Adjust to 1/2" and more according to size of gravel.

***Chain Idler Adjustment* (Figure below)**

A - COMPRESSION SPRING:

1. Every ten operating hours check the height of the compression spring (item 1), to have chain idler maximal efficiency.
2. Adjust the distance from the top of the welded bushing (item 2) to the bottom of the flat washer (item 3) by tightening the nut (item 4), to obtain **A**:

   4 1/4" for 74" to 88" snowblower
   3 1/4" for 92" and up snowblower

B - DRIVING CHAIN:

1. At the end of the operating season, check the chain elongation by measuring the distances **B1** from top of the sprocket to underneath the side plate, and **B2** the gap between the chain, as shown on figures.
2. Those distances must be of 3/4" minimum, if not under 3/4"; the chain is too much stretched and may caused premature wear of the sprockets. It needs to be changed.

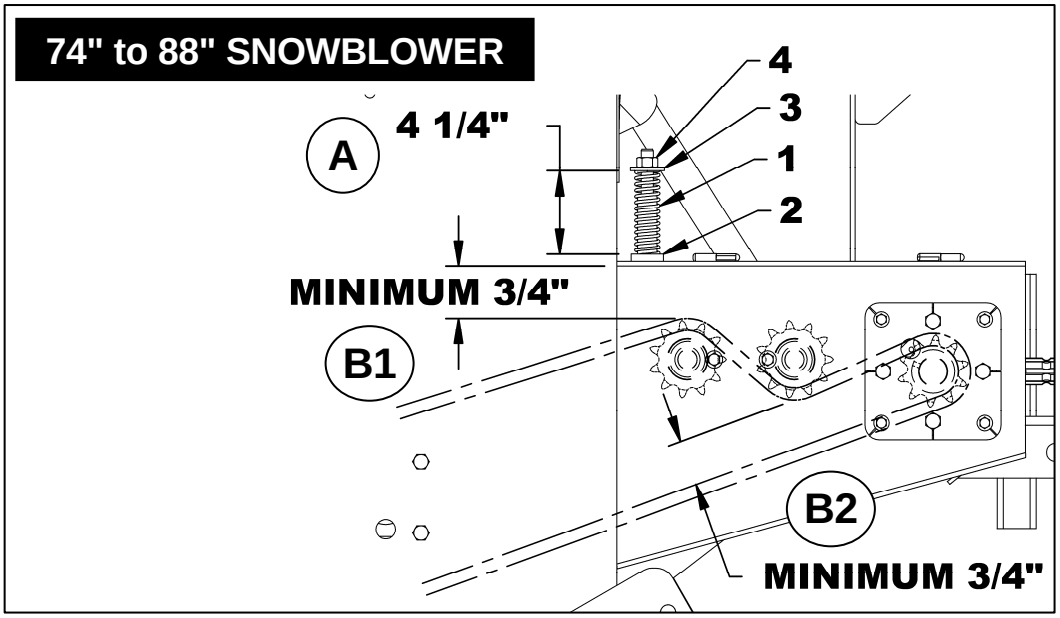

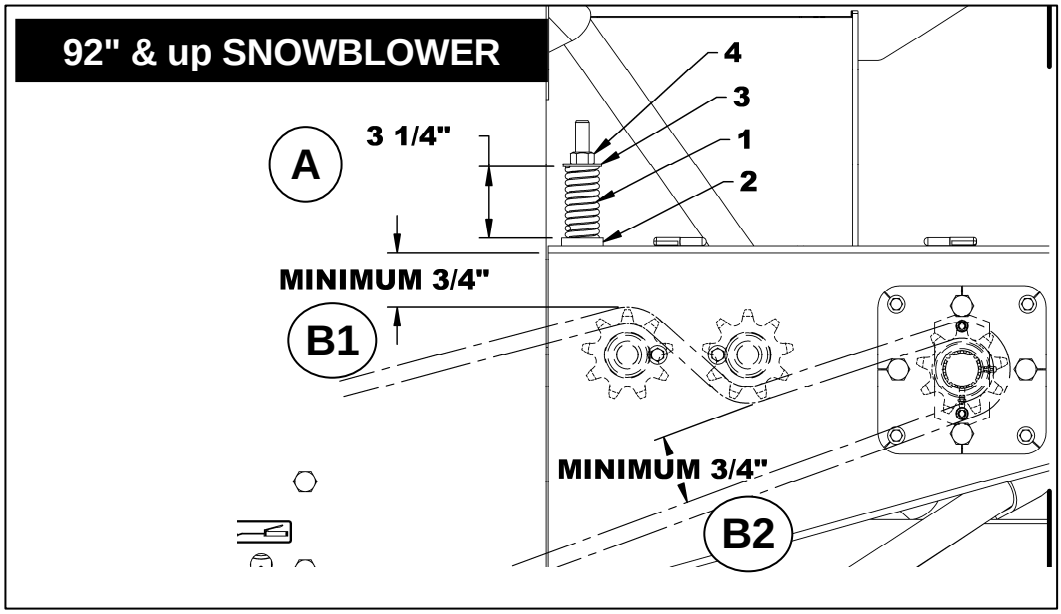

SNOW REMOVAL METHODS

When removing snow, do not use the snowblower as a dozer blade to push snow. Let the snowblower work its way through deep drifts. If the speed of your tractor is too fast, the snowblower may become overloaded and clog. For best results, raise the snowblower and remove a top layer of snow. A second pass with the snowblower will remove the remaining snow.

IMPORTANT : Use full RPM power when removing wet, sticky snow. Low RPM power will tend to clog the chute.

WARNING: Do not use hands or feet to unclog chute. Do not attempt to clear clogged chute of snow while tractor engine is running. If the chute clogs, disengage the drive shaft, shut off the tractor engine, remove the ignition key, wait for all movement to stop, and then clear the snow from the chute.

A definite pattern of operation is required to thoroughly clean the snow area. These patterns will avoid throwing snow in unwanted places as well as eliminating a second removal of snow.

PATTERN 1

DISCHARGE SNOW BOTH SIDES

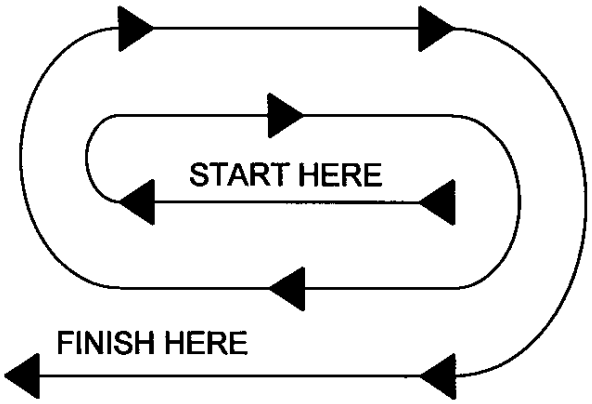

DISCHARGE SNOW BOTH SIDES

Where it is possible to throw the snow to the left and right (above), as on a long driveway, it is advantageous to start in the middle. Plow from one end to the other, throwing snow to both sides without changing the direction of the discharge guide

PATTERN 2

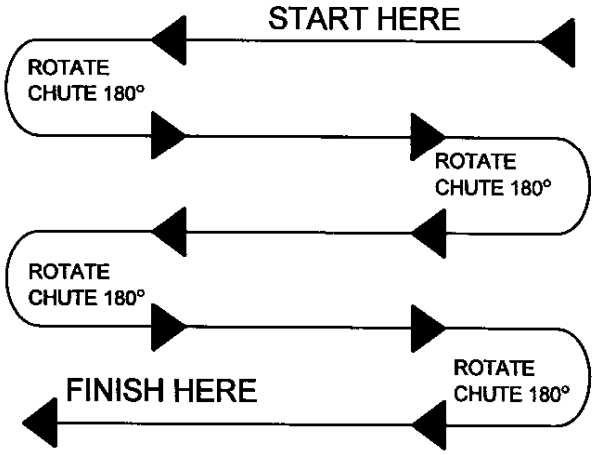

DISCHARGE SNOW THIS SIDE ONLY

If the snow can only be thrown to one side of the driveway or sidewalk (above), start on the opposite side. At the end of the first pass, rotate the discharge guide 180 degrees for the return pass. At the end of each succeeding pass, rotate the discharge guide 180 degrees to maintain direction of throw in the same area.

MAINTENANCE

Shearbolts

Check the shearbolts indicated on the figure below at frequent intervals for proper tightness to be sure the blower is in safe working condition. If the shearbolts need replacement, use the following parts only:

Drive Shaft:

Two shearbolts hex. 5/16" NC x 1 1/4" PTD, 5/16" NC nut and 5/16" lockwasher. Part # 668032.

Driveline:

Bolt M12 x 65mm long gr.10.9 PTD including nut. Part # 662296.

WARNING: Provide adequate blocking before working under the snowblower when in the raised position.

Driveline

IMPORTANT: When the snowblower is not used for more than two weeks, perform driveline maintenance and always store it in a dry place, away from bad weather conditions.

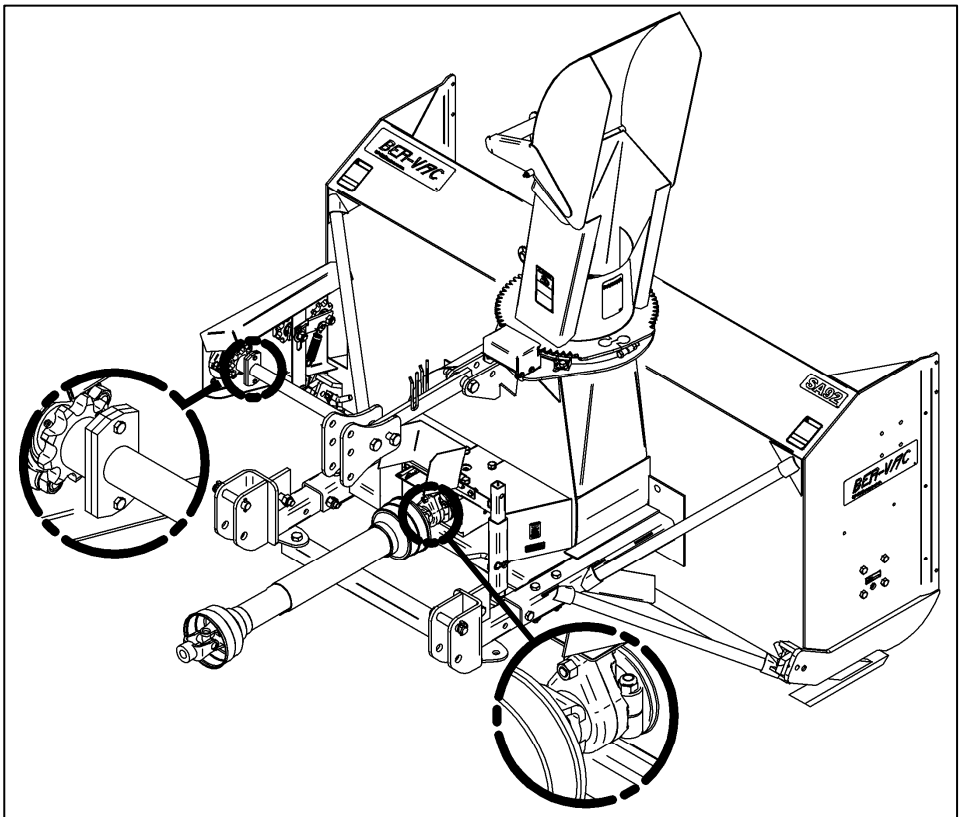

SHEAR BOLTS

LUBRICATION

Use oil or a grease gun and lubricate as follows:

DESCRIPTION	INTERVAL	LUBRICATION REQUIRED
Driveline	8 hours	Grease each universal joint. Separate the sliding parts and cover each one of them with grease
	16 hours	Oil the push pins
Chain	4 hours and after each operation	Lubricate with chain lube
	24 hours	Grease chain idler
Drive Shaft	24 hours of operation	Grease fitting on shear plate
Gearbox	Every month	Check oil level. If needed, add AGMA 5EP extreme pressure oil, SAE 80W90 gear oil or equivalent.
	Once a year	Replace oil
Bearing	24 hours of operation	Grease each auger bearing

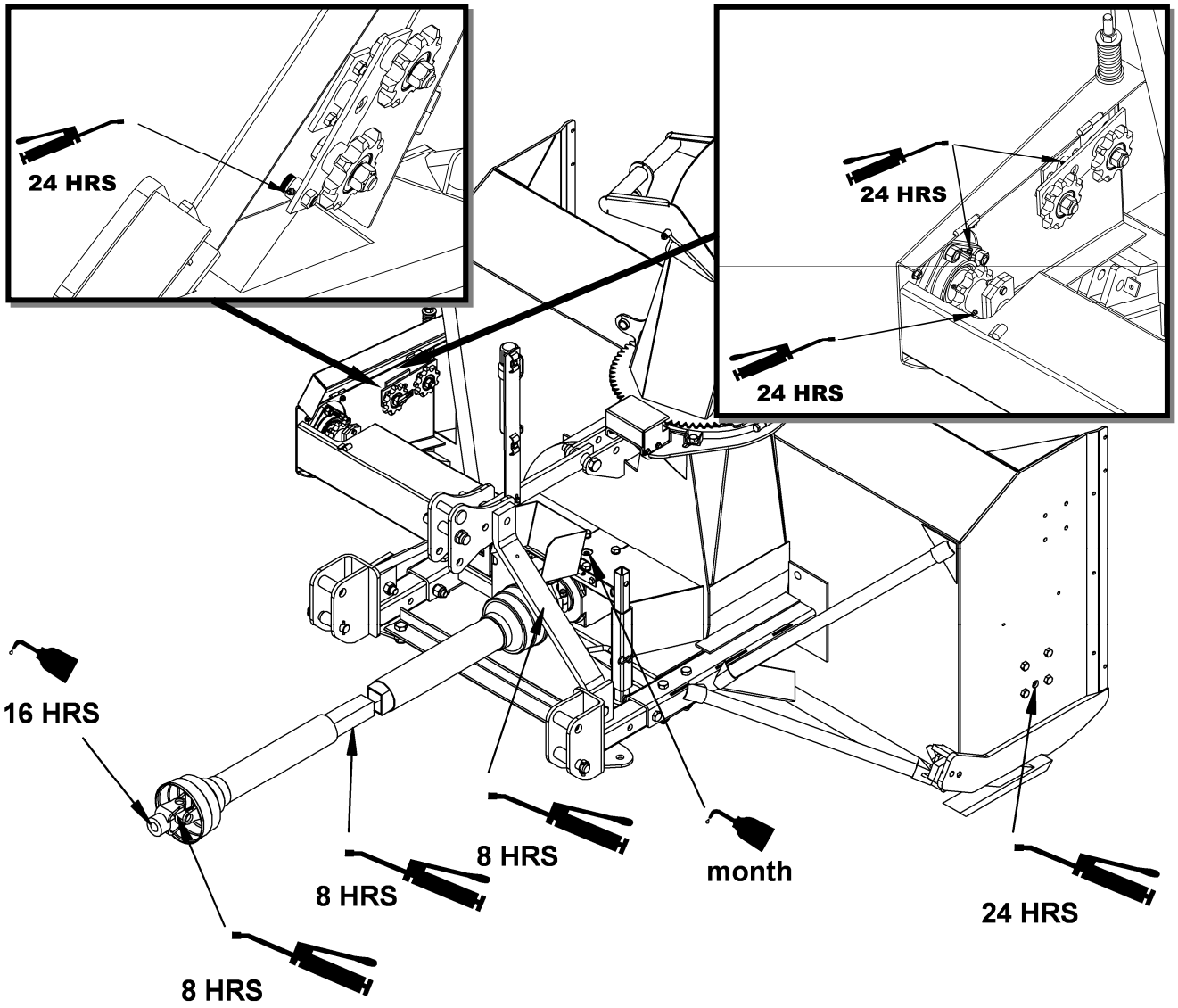

LUBRICATION

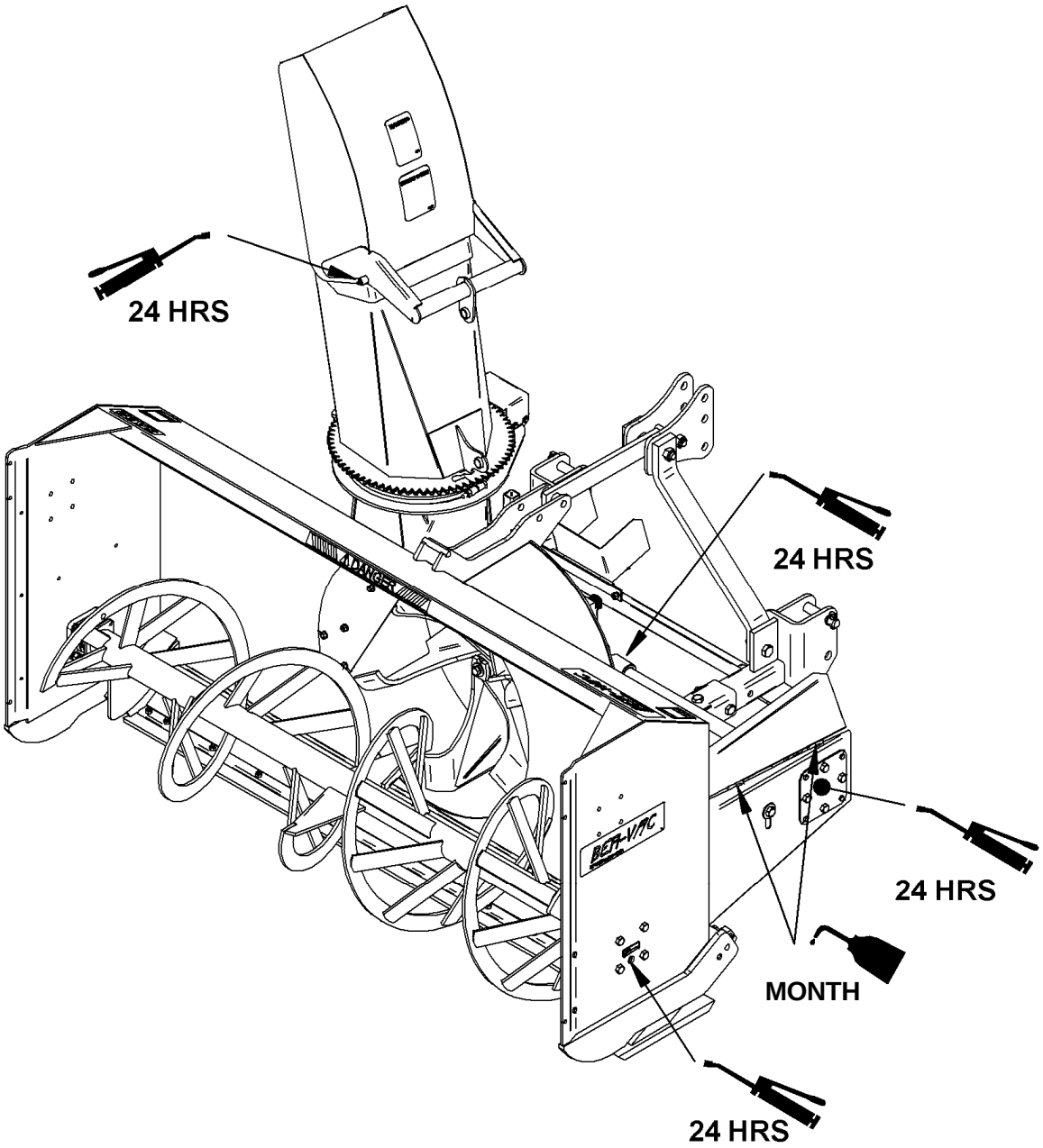

DRIVELINE TROUBLESHOOTING

	AVOIDABLE DAMAGES	POSSIBLE CAUSES	CORRECTIVE ACTIONS
QUICK-DISCONNECT YOKE 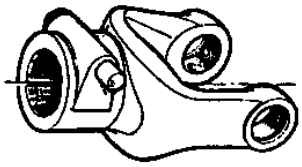	• Quick-disconnect pin tight or completely seized. • Quick-disconnect pin damaged (broken or bent) • Quick-disconnect pin damaged in the locking portion. 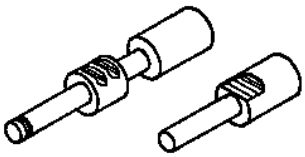	• Quick-disconnect pin dirty (insufficient maintenance). • Quick-disconnect pin defective (forced engagement, incorrect handling) • Excessive shaft length. • Axial loads too high.	• Clean, oil and follow service instructions. • Replace quick-disconnect pin. • Shorten shaft length (cut both telescopic tubes as well as shield and remove burrs). • Replace quick-disconnect pin. • Clean and grease telescopic tubes, and replace both tubes, if necessary. • Replace quick-disconnect pin.

Note: Quick-disconnect pins must be cleaned and greased every 16 hours.

	AVOIDABLE DAMAGES	POSSIBLE CAUSES	CORRECTIVE ACTIONS
YOKE 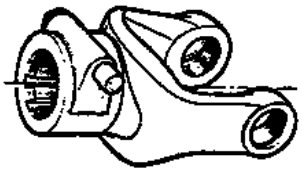	• Yoke ears deformation 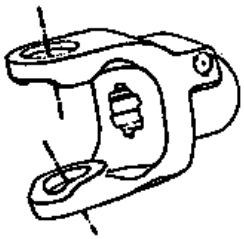 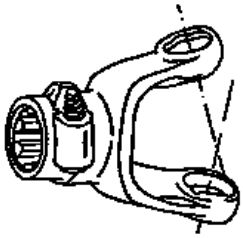	• Excessive shaft length. • Axial loads too high. • Excessive working angle and torque.	• Shorten shaft length (cut both telescopic tubes as well as shields and remove burrs). • Replace defective yokes. • Clean and grease telescopic tubes, and replace both tubes, if necessary. • Replace defective yokes. • Verify compatibility between shaft and working conditions (torque vs. angle). • Disengage tractor driveline during cornering or when lifting or lowering the implement. • Change to a larger driveline size. • Replace defective yokes.
	• Yoke ears distorted. 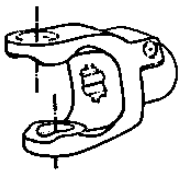	• Overload caused by high starting and peak torques.	• Engage driveline more carefully. • Use appropriate safety devices. • Replace defective yokes.
	• Yoke ears worn or pounded. 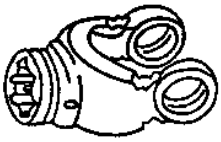	• Excessive working angle.	• Avoid excessive working angle. • Disengage tractor driveline during cornering. • Replace defective yokes.

	AVOIDABLE DAMAGES	POSSIBLE CAUSES	CORRECTIVE ACTIONS
CROSS KIT 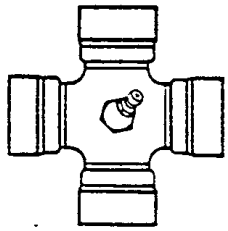	• Cross arms broken. 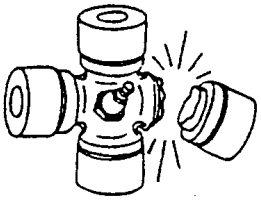	• Extreme torque peak or shock load. • Axial loads too high.	• Use appropriate safety device. • Change to a larger driveline size. • Shorten driveline shaft. • Replace defective cross bearings.
	• Bearing caps turning in their cross journal. • Overheated bearing caps.	• Excessive continuous torque and/or excessive working angle. • Inadequate greasing.	• Verify compatibility between shaft and working conditions. • Carefully follow greasing instructions. • Replace defective cross bearings.
	• Accelerated wear of cross kit. 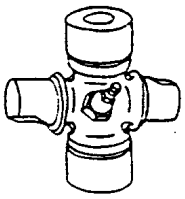	• Excessive continuous torque and/or excessive working angle. • Inadequate greasing.	• Verify compatibility between shaft and working conditions. • Carefully follow greasing instructions. • Replace defective cross bearings.

Note: Cross bearings must be greased every 8 working hours.

	AVOIDABLE DAMAGES	POSSIBLE CAUSES	CORRECTIVE ACTIONS
TELESCOPIC TUBES 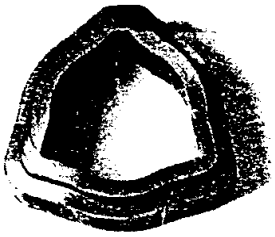	• Telescopic tubes failure or twisting. 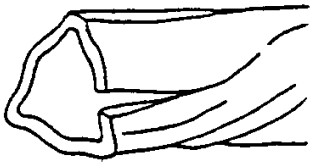	• Extreme torque peak or shock load. • Short tube engagement.	• Use appropriate safety device. • Change to a larger driveline size. • Replace the driveline drive shaft with one having adequate length. • Replace defective tubes.
	• Accelerated wear of telescopic tubes.	• Extreme load when sliding. • Short tube engagement. • Inadequate greasing. • Dirt	• Change to a driveline with rilsan coated inner tube. • Replace the driveline with one having adequate length. • Carefully follow greasing instructions. • Replace defective tubes.

Note: Telescopic tubes must be cleaned and greased every 8 working hours.

	AVOIDABLE DAMAGES	POSSIBLE CAUSES	CORRECTIVE ACTIONS
SHIELD 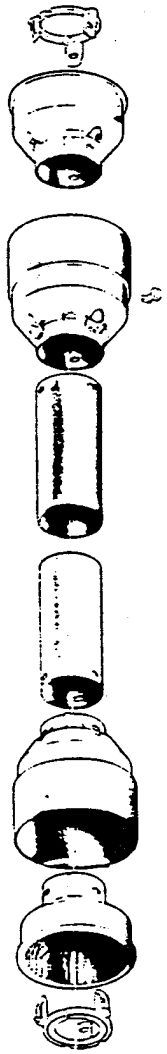	• Excessive wear of shield bearings. 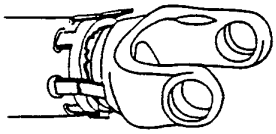	• Insufficient lubrication. • Incorrect chain mounting. • Shield interfering with implement.	• Follow lubrication instructions. • Mount chain to allow maximum angularity. • Avoid contact of the shields with fixed parts of the machine or tractor. • Replace shield bearings.
	• Chain moving or failure. 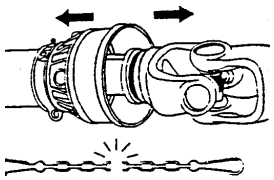	▪ Shield interfering with implement. ▪ Incorrect chain mounting.	• Avoid contact of the shields with fixed parts of the machine or tractor. • Mount chain to allow maximum angularity. • Replace defective parts.
	• Shield cone damaged. 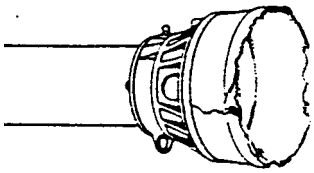	• Shield cone in contact with components on the tractor and/or implement. • Excessive angularity.	• Eliminate interference between Shield cones and any part on the tractor and/or implement. • Avoid excessive angle during cornering or when lifting or lowering the implement. • Replace damaged Shield cones.
	• Shield tubes damaged (deformed and split at one side). 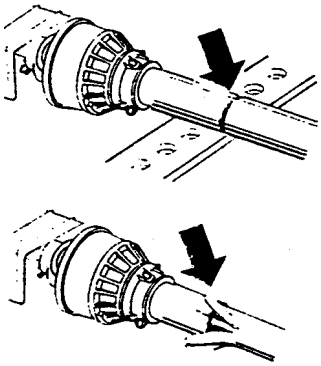	• Shields in contact with components on the tractor and/or implement. • Shield tubes overlap too short or no overlap at all with extended driveline.	• Eliminate interference between Shield cones and any part on the tractor and/or implement. • Replace damaged tubes. • Adjust Shield tubes length with longer tubes.

Note: Shield bearings must be greased every 8 working hours.

INTRODUCTION

All parts are illustrated in "exploded views" which show the individual parts in their normal relationship to each other. Reference numbers are used in the illustrations. These numbers correspond to those in the "Reference Number" (REF) column, and are followed by the description and quantity required.

O/L - "Obtain Locally" in the part number column indicates common hardware that is available at your local hardware supply.

Right hand and left hand are determined by those seen by the conductor standing behind the equipment.

Orders must give the complete description, correct part number, the total amount required, the serial number, the method of shipment and the shipping address.

The manufacturer reserves the rights to change, modify, or eliminate from time to time, for technical or other reasons, certain or all data, specifications, or the product or products themselves, without any liability or obligation.

The parts listed here are available through your local dealer.

MANUAL HOLDER – ALL MODELS

REF.	DESCRIPTION	QTY	PART #
1	Manual holder	1	4200030
2	Bolt hex. 5/16" NC x 3/4" lg gr. 5, PTD	2	O/L
3	Nut nylon insert 5/16" NC, PTD	2	O/L

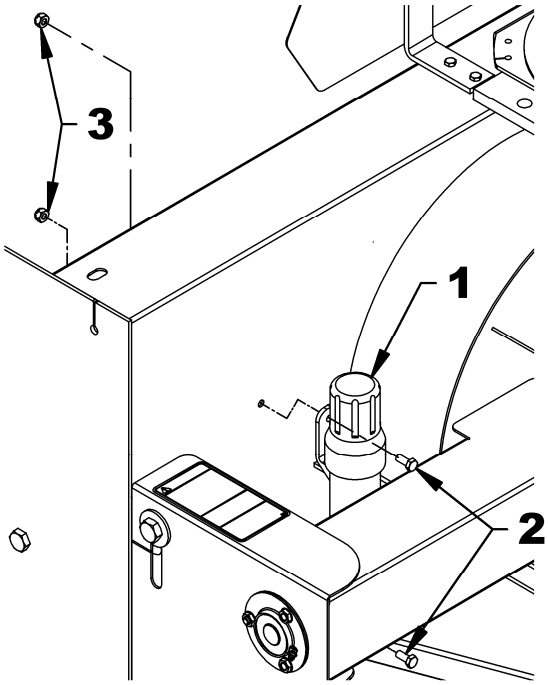

CHAIN IDLER

REF.	DESCRIPTION	QTY	PART #
1	Chain Idler	1	670406
2	Idler Spacer 0.343	2	669397
3	Idler sprocket 3/4" bore 80A11	2	3300027
4	Bolt hex. 3/4" NC X 2 1/2" gr.5, PTD	2	O/L
5	Stover nut 3/4", PTD	2	O/L
6	Bolt hex. 3/8" NC X 1" gr.5, PTD	2	O/L
7	Flat washer 5/16" (3/8" hole), PTD	2	O/L
8	Lockwasher 3/8", PTD	2	O/L
9	Idler Lever	1	669401
10	Spring guide PTD	1	669396
11	Compression spring	1	2200022
12	Flat washer 5/8" (11/16" hole), PTD	1	O/L
13	Nut nylon insert 5/8", PTD	1	O/L
14	Shoulder screw 5/8" x 1/2" lg x 1/2	1	3200023
15	Stover nut 1/2", PTD	1	O/L
16	Grease fitting 1/4" NF	1	654106

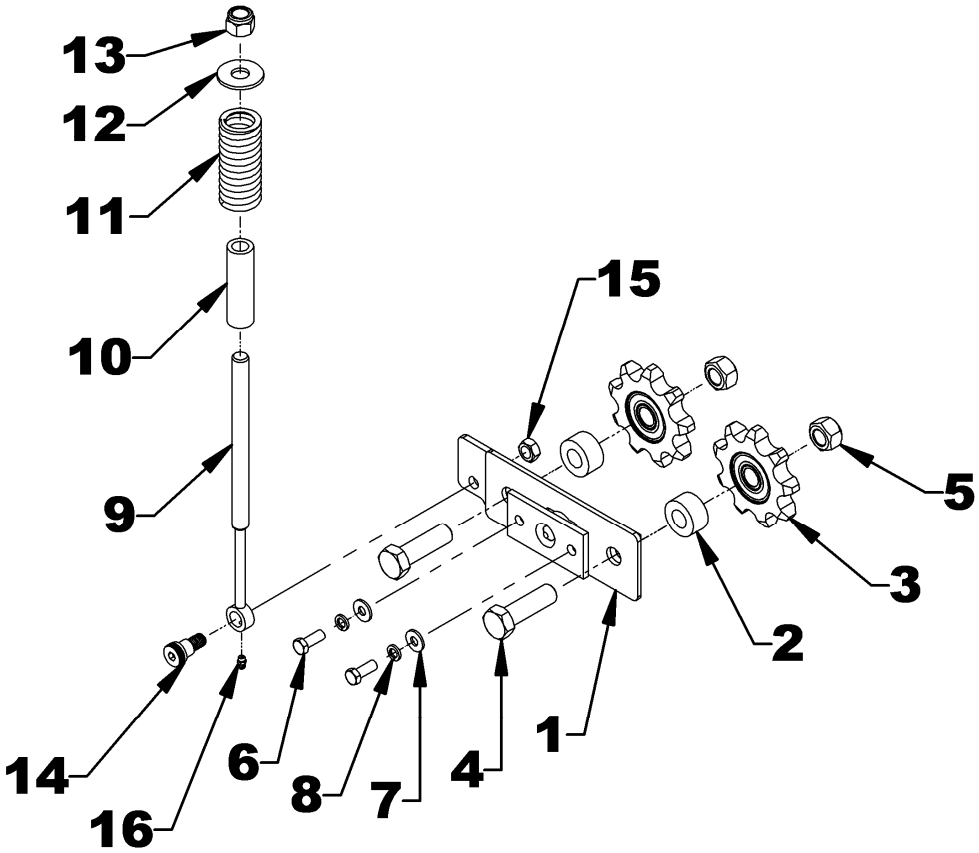

SNOWBLOWERS SA92 & SA98 // FRONT

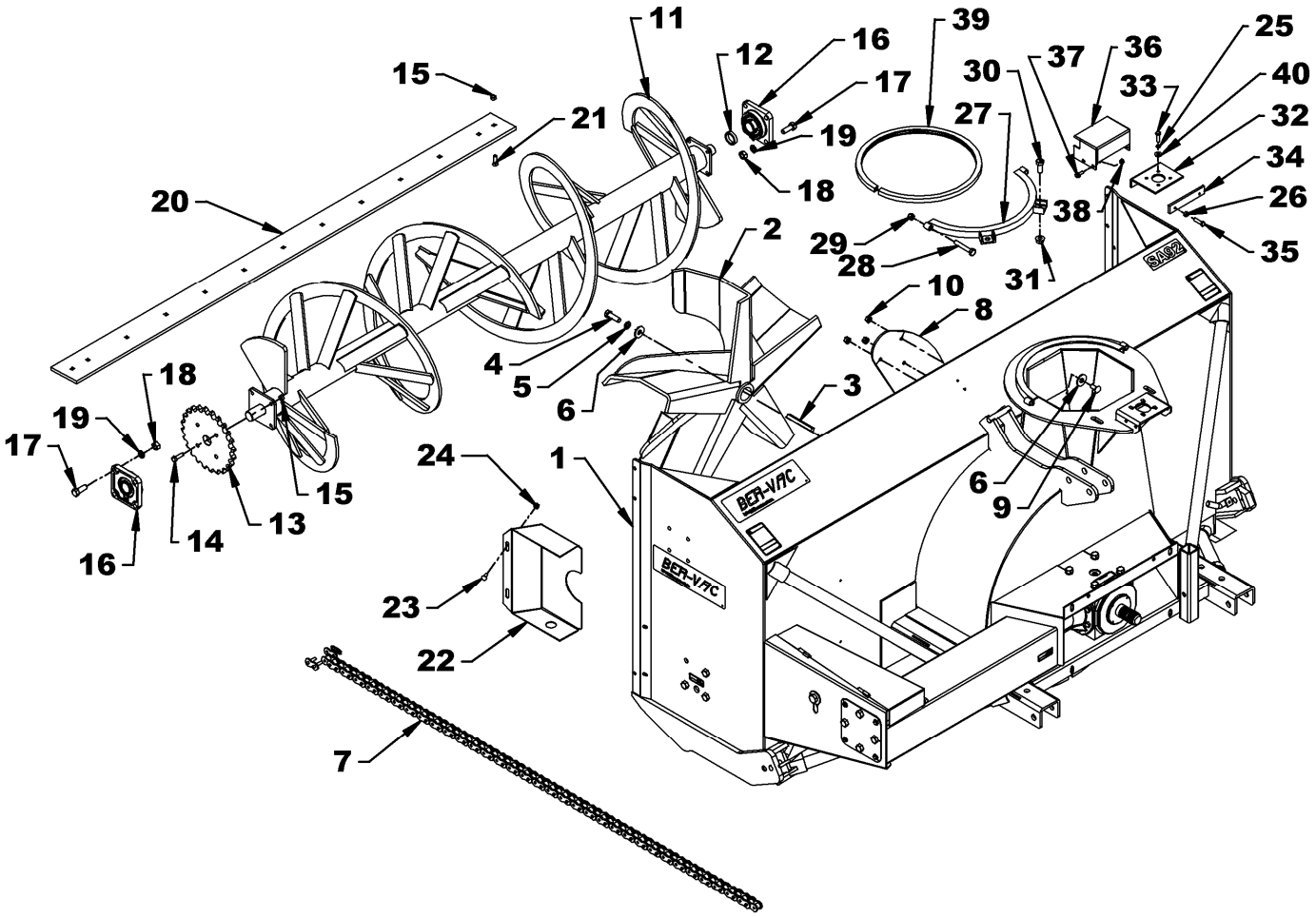

SNOWBLOWERS SA92 & SA98 // FRONT

		SA92		SA98	
REF.	DESCRIPTION	QTY	PART #	QTY	PART #
1	Housing	---	---	---	---
2	Fan	1	668968	1	668968
3	Key 1/2" x 1/2" x 4 3/4" lg	1	662380	1	662380
4	Bolt hex. 5/8" NC x 2" gr.5 PTD	1	O/L	1	O/L
5	Lockwasher 5/8" PTD	3	O/L	3	O/L
6	Flat washer 11/16" hole PTD	2	O/L	2	O/L
7	Chain #100 x 70 links inc. half link	1	3300042	1	3300042
	- Connecting link #100	1	3300032	1	3300032
8	Restriction plate	1	666325	1	666325
9	Carriage bolt 1/2" NC x 1 1/4" gr.5 PTD	6	O/L	6	O/L
10	Flange nut 1/2NC, PTD	6	O/L	6	O/L
11	Auger	1	668040	1	668043
12	Spacer	1	662368	1	662368
13	Sprocket 1 1/2" hole dia.	1	3300034	1	3300034
14	Bolt hex. 7/16" NC x 1 1/2" gr.5 PTD	4	O/L	4	O/L
15	Stover lock nut 7/16" NC, PTD	17	O/L	17	O/L
16	Bearing 1 1/2" dia. hole.	2	4300018	2	4300018
17	Bolt hex. 5/8" NC x 1 3/4" gr.5 PTD	8	O/L	8	O/L
18	Nut hex. 5/8" NC PTD	8	O/L	8	O/L
19	Lockwasher 5/8" PTD	8	O/L	8	O/L
20	Cutting edge	1	667729	1	667928
21	Plow bolt 7/16" NC x 1 1/2" gr.5 PTD	13	O/L	13	0400011
22	Front guard	1	668066	1	668066
23	Carriage bolt 3/8" NC x 1" gr.5 PTD	2	O/L	2	O/L
24	Nut serrated flange 3/8" PTD	2	O/L	2	O/L
25	Lockwasher 3/8" PTD	4	O/L	4	O/L
26	Nut hex. 3/8" NC PTD	2	O/L	2	O/L
27	Retaining plate	1	665988		665988
28	Bolt hex. 1/2" NC x 3 1/4 gr.5 PTD	2	O/L	2	O/L
29	Nylon insert lock nut 1/2" NC PTD	2	O/L	2	O/L
30	Bolt hex. 5/8" NC x 1 1/2" gr.5 PTD	2	O/L	2	O/L
31	Nut serrated flange 5/8" NC PTD	2	O/L	2	O/L
32	Anchor plate	1	667338	1	667338
33	Bolt hex. 3/8" NC x 1 1/4" gr.5 PTD	4	O/L	4	O/L
34	Anchoring flat bar	1	667339	1	667339
35	Bolt hex. 3/8" NC x 1 1/2" gr.5 PTD	2	O/L	2	O/L
36	Gear shield	1	667929	1	667929
37	Bolt serrated flange 5/16" NC x 1" gr.5 PTD	4	O/L	4	O/L
38	Nut serrated flange. 5/16" NC PTD	4	O/L	4	O/L
39	Rotation bushing	1	667723	1	667723
40	Flat washer 7/16" hole PTD	4	O/L	4	O/L

SNOWBLOWER SA92 & SA98 // REAR

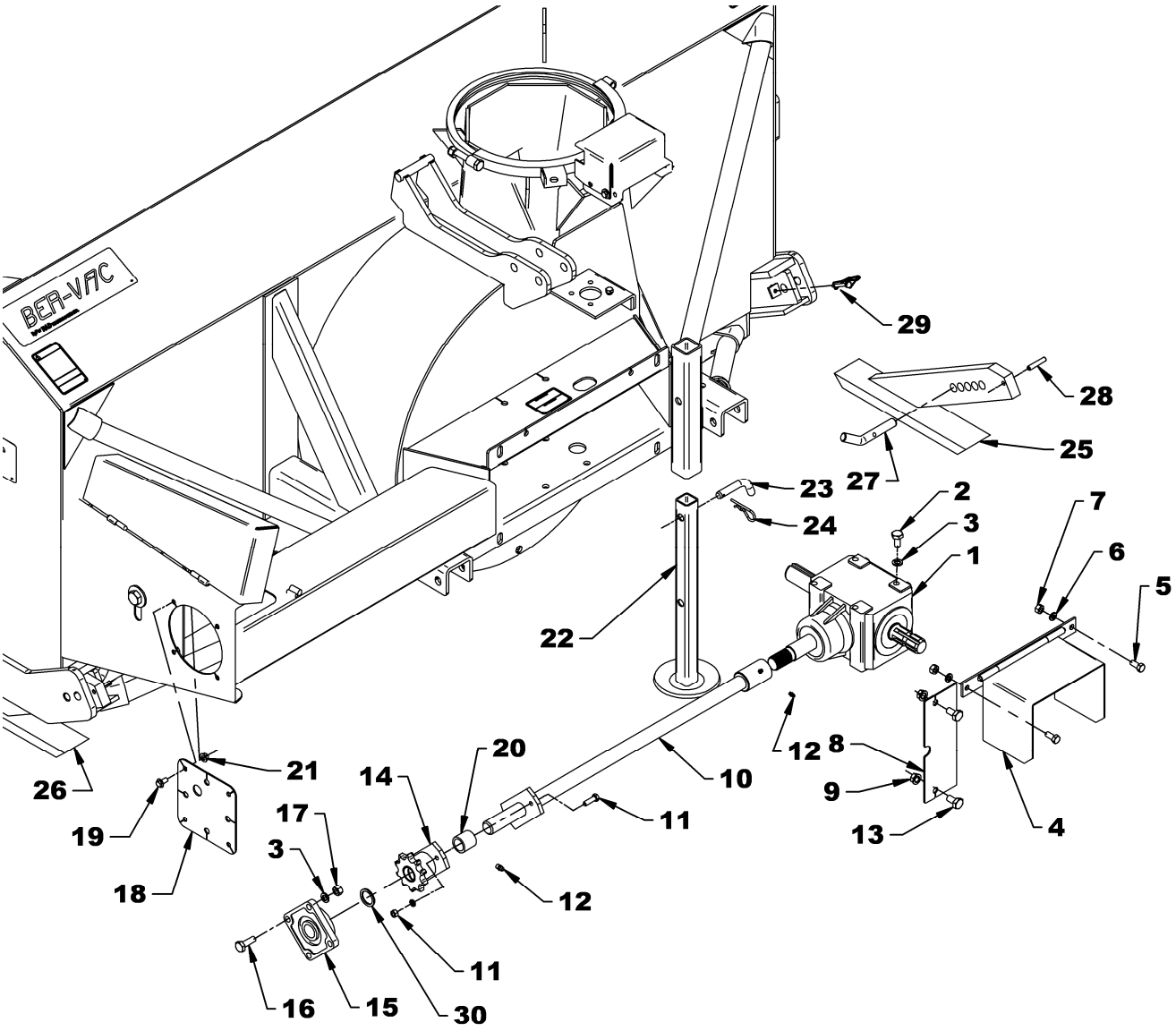

SNOWBLOWER SA92, SA98 // REAR

		SA92		SA98	
REF.	DESCRIPTION	QTY	PART #	QTY	PART #
1	Gearbox assembly	1	662281	1	662281
2	Bolt hex. 5/8" NC x 1" gr.5 PTD	8	O/L	8	O/L
3	Lockwasher 5/8" PTD	12	O/L	12	O/L
4	PTO protector	1	663675	1	663675
5	Carriage bolt 7/16" NC x 1" gr.5 PTD	2	O/L	2	O/L
6	Lockwasher 7/16" PTD	2	O/L	2	O/L
7	Nut hex. 7/16" NC PTD	2	O/L	2	O/L
8	Rear guard	1	667907	1	667907
9	Flange nut 1/2" NC PTD	2	O/L	2	0900046
10	Drive shaft	1	668031	1	668044
11	Shear bolt, lock & nut	2	668032	2	668032
12	Grease fitting 1/4" NF	2	654106	2	654106
13	Bolt hex. 1/2" NC x 1" gr.5 PTD	2	O/L	2	O/L
14	Shear plate	1	668033	1	668033
15	Bearing 1 1/2" hole	1	4300071	1	4300071
16	Bolt hex. 5/8" NC x 1 3/4" gr.5 PTD	4	O/L	4	O/L
17	Nut hex. 5/8" NC PTD	4	O/L	4	O/L
18	Drive support	1	668042	1	668042
19	Bolt hex. 3/8" NC x 3/4" gr.5 PTD	4	O/L	4	O/L
20	Bushing	1	4300073	2	4300073
21	Nut serrated flange 3/8" NC PTD	4	O/L	4	O/L
22	Parking stand	1	662252	1	662252
23	Pin 5/8" dia. x 3" lg, bent	1	4600044	1	4600044
24	Hairpin 4mm x 80mm lg. PTD	1	O/L	1	O/L
25	Right skid shoe	1	667875	1	667875
26	Left skid shoe	1	667876	1	667876
27	Pin 3/4" dia. x 3 13/16" lg , for skid shoe	2	667899	2	667899
28	Spring pin 3/8" x 2" PTD	2	O/L	2	O/L
29	Round wire lock pin 1/4" PTD	2	O/L	2	O/L
30	Spacer ring	1	669257	1	669257

THREE POINT HITCH

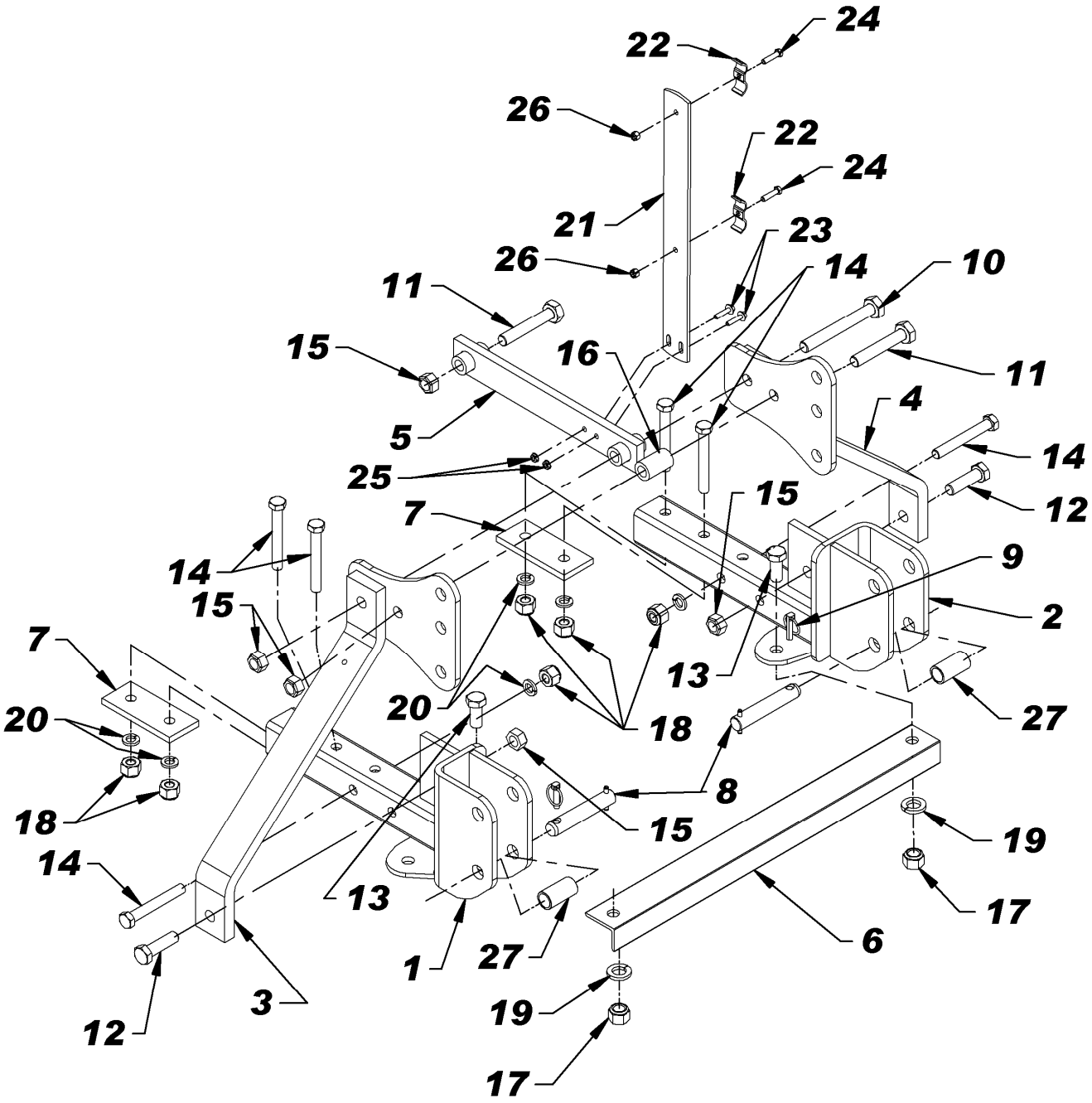

THREE POINT HITCH

REF.	DESCRIPTION	QTY	PART #
1	Left lower hitch	1	668068
2	Right lower hitch	1	668067
3	Hitch - LH	1	668069
4	Hitch - RH	1	668070
5	Upper hitch	1	668635
6	Brace	1	668072
7	Reinforcement plate	2	667936
8	Pin Cat. 2	2	4600042
9	Linchpin 7/16" dia. PQÉ	2	O/L
10	Bolt hex. 7/8" NC x 7" gr.5 PTD	1	O/L
11	Bolt hex. 7/8" NC x 5" gr.5 PTD	2	O/L
12	Bolt hex. 7/8" NC x 3" gr.5 PTD	2	O/L
13	Bolt hex. 7/8" NC x 2" gr.5 PTD	2	O/L
14	Bolt hex. 3/4" NC x 5 1/2" gr.5 PTD	6	O/L
15	Stover nut 7/8" NC, PTD	5	O/L
16	Bushing Ø1 1/2" ext. x 2 1/2" lg	1	668073
17	Nut 7/8" NC nylon insert, PTD	2	O/L
18	Nut 3/4" NC nylon insert, PTD	6	O/L
19	Lockwasher 7/8", PTD	2	O/L
20	Lockwasher 3/4", PTD	6	O/L
21	Hose support	1	668636
22	Hose clamp	2	666583
23	Bolt serrated flange 5/16" NC x 1 1/2" lg PTD	2	O/L
24	Bolt hex. 3/8" NC x 1 1/2", gr. 5 PTD	2	O/L
25	Nut serrated flange 5/16" NC PTD	2	O/L
26	Nut nylon insert 3/8" NC PTD	2	O/L
27	Bushing 1 1/8" int. x 2 3/4" lg x 1 7/16" ext.	2	4600046

STANDARD CHUTE – 8247 & 8247A

REF.	DESCRIPTION	QTY	2009 & LESS HEIGHT 53 1/4" 8247	2010 & UP HEIGHT 44" 8247A
1	Chute base	1	667097	669380
2	Deflector	1	667098	669381
3	Hinge pin	1	667090	669362
4	Grease fitting 1/8" NPT	1	656493	656493
5	Flat washer 10MM hole PTD	2	1400019	1400019
	OPTIONAL - 8089			
6	Adjustment tube	1	654076	654076
7	Adjustment rod	1	654074	654074
8	Round wire lock pin 1/4"	1	1900006	1900006
9	Cotter pin 1/4" dia. x 2" PTD	2	1500022	1500022

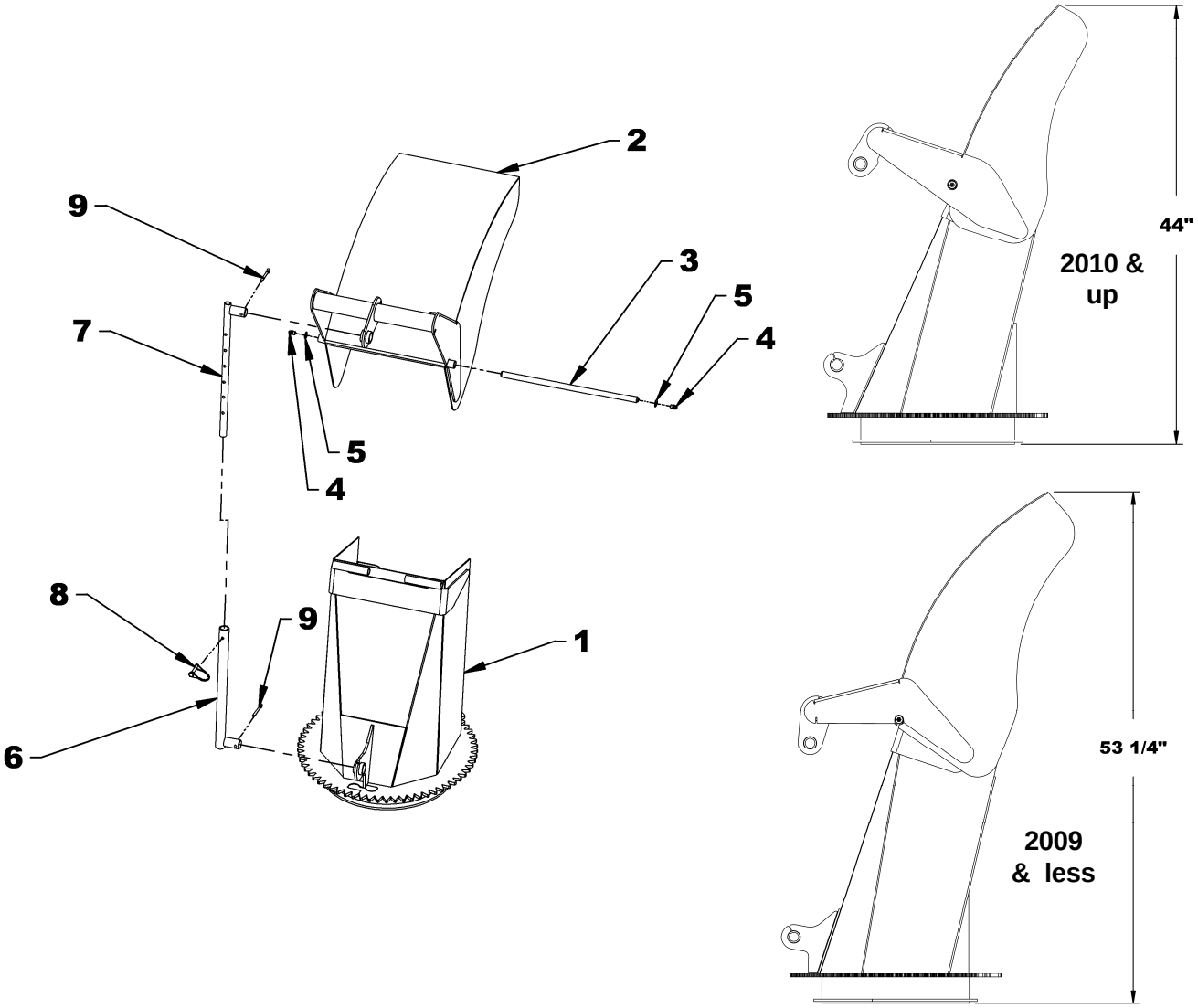

THREE PART CHUTE – 8169B - 2009 & LESS - HEIGHT 64 1/2"

REF.	DESCRIPTION	QTY	PART #
1	Upper deflector	1	667077
2	Middle deflector	1	667076
3	Chute base	1	667074
4	Pin 5/8" x 17 7/8" lg	1	667090
5	Pin 5/8" x 18 7/8" lg	1	667082
6	Flat bar	2	667132
7	Grease fitting 1/8" NPT	1	656493
8	Nylon insert lock nut 3/4" NC PTD	4	1000013
9	Flat washer 10MM hole, PTD	4	1400019

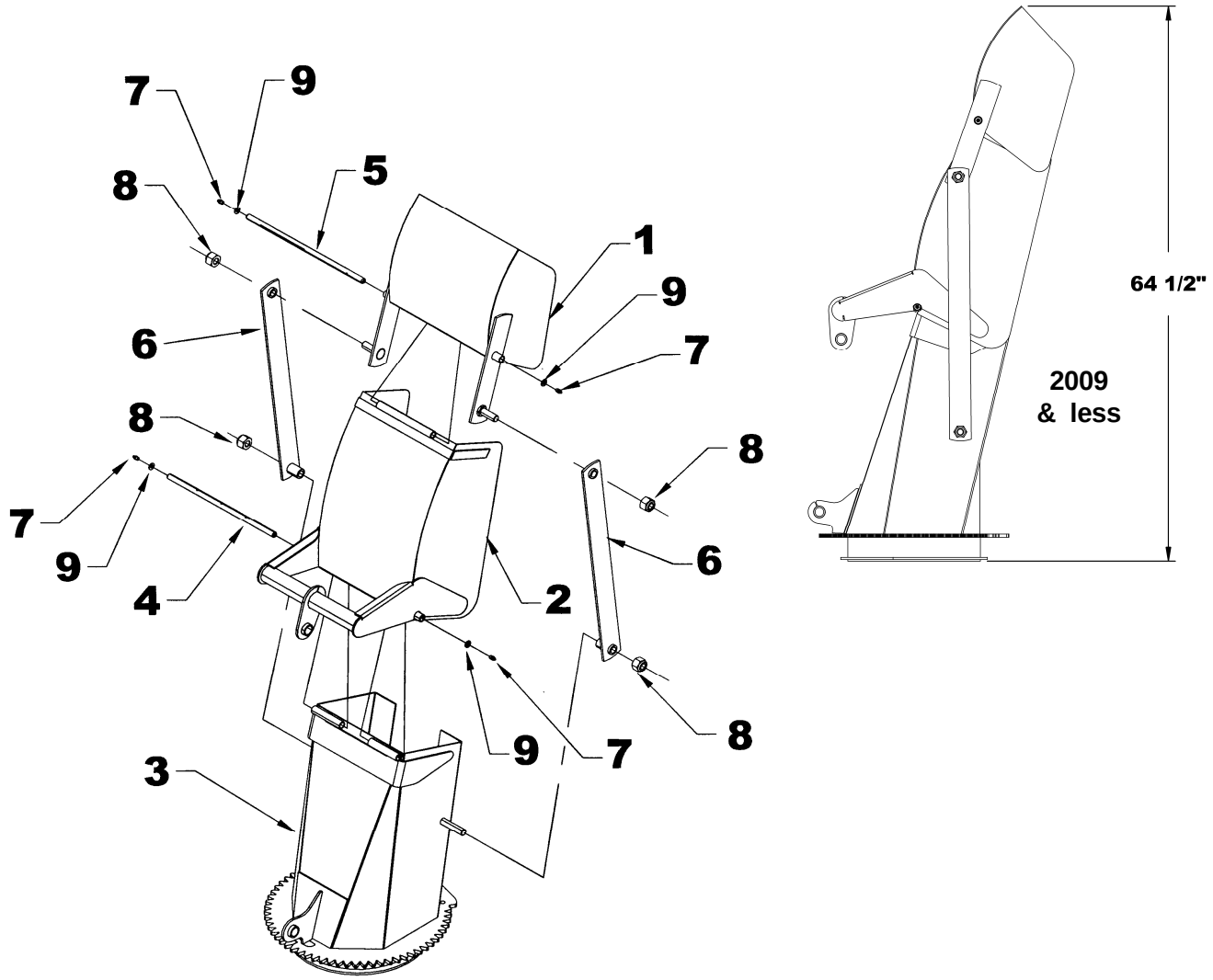

SEMI-INDUSTRIAL CHUTE – 8169C - 2010 & UP - HEIGHT 50 1/2"

REF.	DESCRIPTION	QTY	PART#
1	Deflector – upper	1	669361
2	Deflector – middle	1	669360
3	Chute base	1	669359
4	Pin 5/8" x 15 3/4" lg	2	669362
5	Flat Bar	2	669363
6	Grease fitting 1/8" NPT	4	656493
7	Stover lock nut 3/4" NC PTD	4	1100008
8	Flat washer 10MM hole, PTD	4	1400019
	OPTIONAL - 8249		
9	Cylinder 2" x 8"	1	3900022
10	- Seal kit	1	3900205

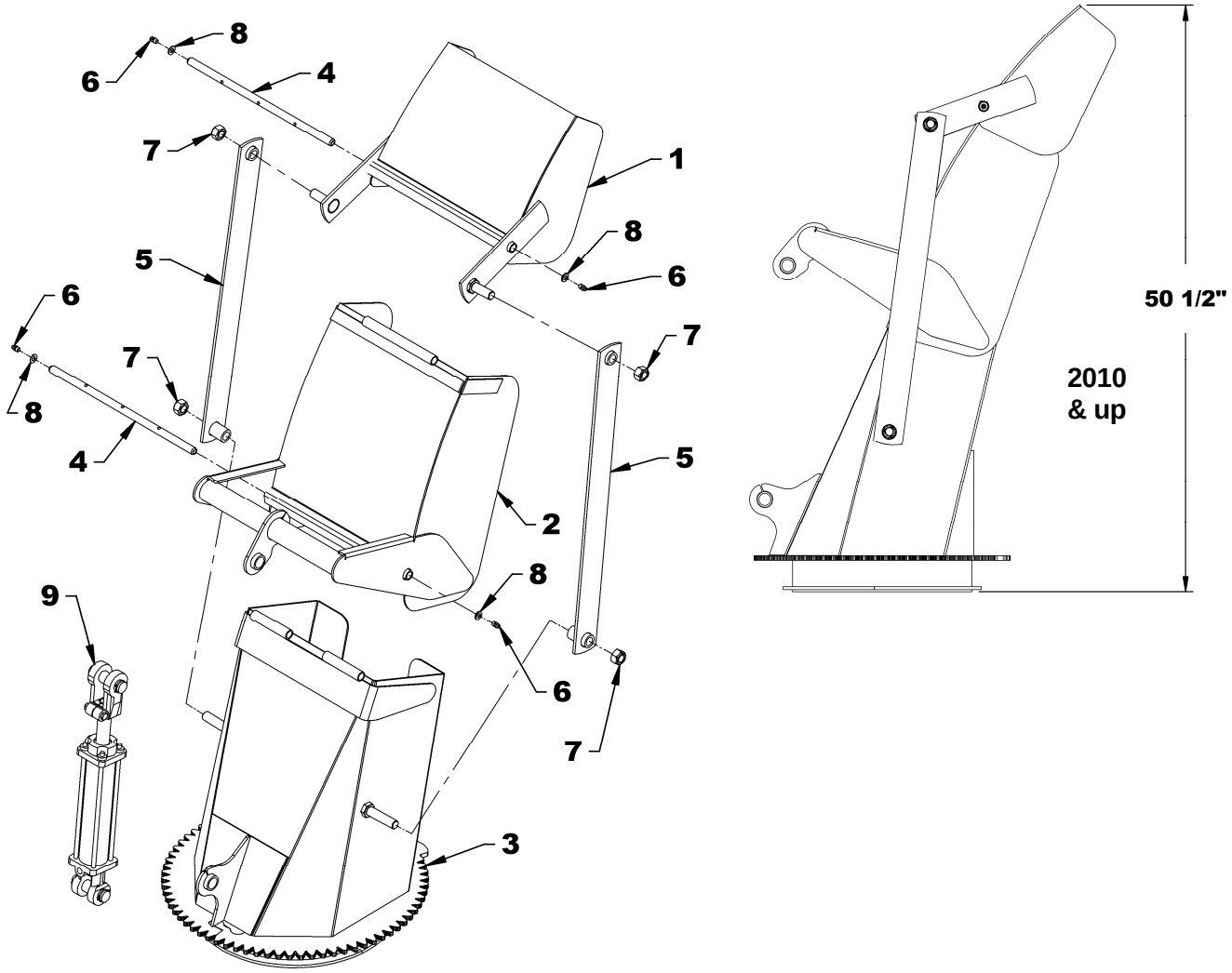

HYDRAULIC ROTATION BY MOTOR – 8164B & BER0030

REF.	DESCRIPTION	QTY	PART#
1	Hydraulic motor M+S for 8164B	1	3900016
	Seal kit	1	3900077
OR	Hydraulic motor EAGLE with safety valve for 8164B	1	3910012
	Seal kit	1	3910013
OR	Hydraulic motor EAGLE with safety valve for BER0030	1	3910016
	Seal kit	1	3910013
2	Safety valve	1	3900076
3	Motor gear	1	665930
4	Key 1/4" x 1/4" x 3/4" lg	1	654686
5	Allen socket head capscrew 5/16" NC x 1 1/2" lg PTD	4	0800031
6	Bolt hex. 8mm x 20mm gr.8.8 PTD	1	O/L
7	Lockwasher 5/16" PTD	1	O/L
8	Flat washer 5/16" (3/8" hole) PTD	1	O/L

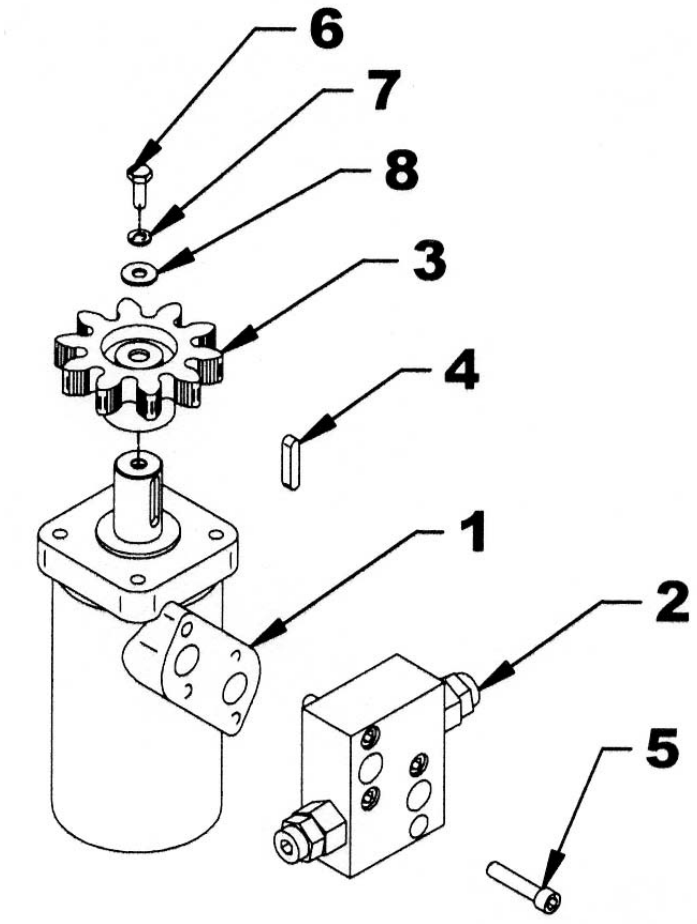

GEARBOX - 662281

REF.	DESCRIPTION	QTY	PART#
1	Casing	1	658850
2	Locknut M45 x 1.5 – 8.8		4500082
3	Bolt M10 x 22 - 8,8	16	658852
4	Input shaft	1	4500077
5	Shim 45.3 x 65.3 x 2.5	1	662283
6	Seal 50 x 72 x 8	1	658856
7	Gear	1	662435
8	Seal 45 x 72 x 8	1	658871
9	Shim 45.3 x 65.3 x 1	1	4500079
10	Snap ring	1	662311
11	Washer 50.3 x 70.3	1	658853
12	Cover	1	4500078
13	Bearing	1	658862
14	Output shaft	1	4500080
15	Extension	1	4500081
16	Bearing	2	658865
17	Seal 52 x 85 x 10	1	658866
18	Shim 45.3 x 65.3	2	658867
19	Bearing	1	658857
20	Gear	1	658861
21	Plug 3/8"	1	658872
22	Key 14 x 9 x40	2	658854

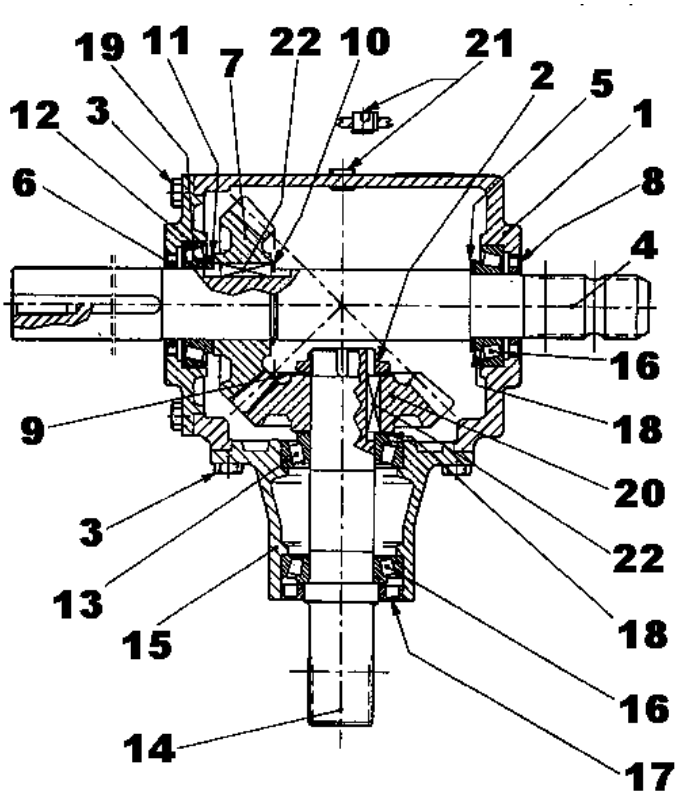

DRIVELINE - 4700151

REF.	DESCRIPTION	QTY.	PART #
1	Push pin yoke assembly	1	662289
2	Universal joint kit	2	662023
3	Outer yoke	1	663152
4	Outer tube	1	663155
5	Inner tube	1	4700192
6	Inner yoke	1	4700193
7	Yoke and hub assembly	1	662294
8	Bolt and nut	2	662297
9	Grease fitting	1	663161
10	Ball	24	663162
11	Shear bolt and nut	1	662296
12	Shields with safety chain	1	4700194
13	Safety pin	1	662291

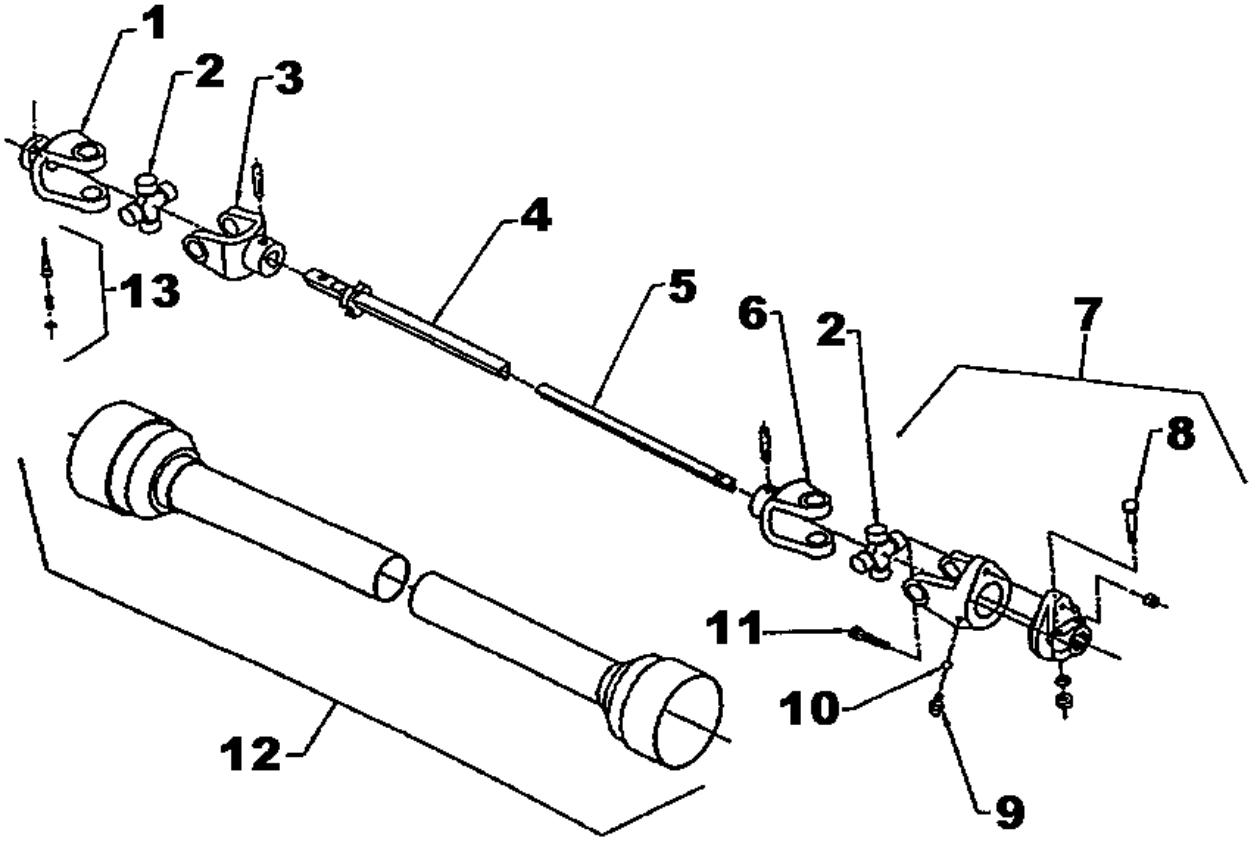

AVAILABLE OPTIONS

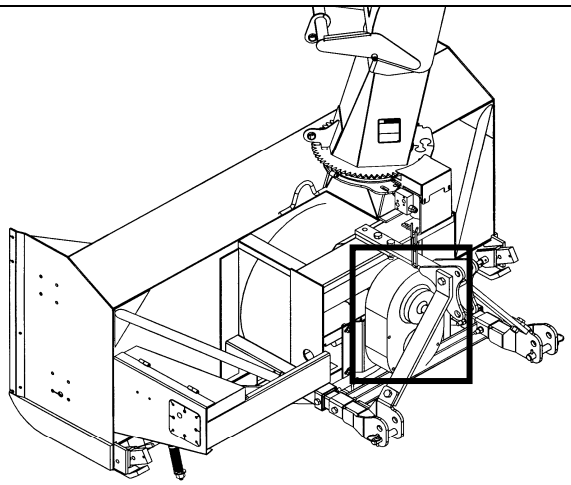

REDUCER – BER0013

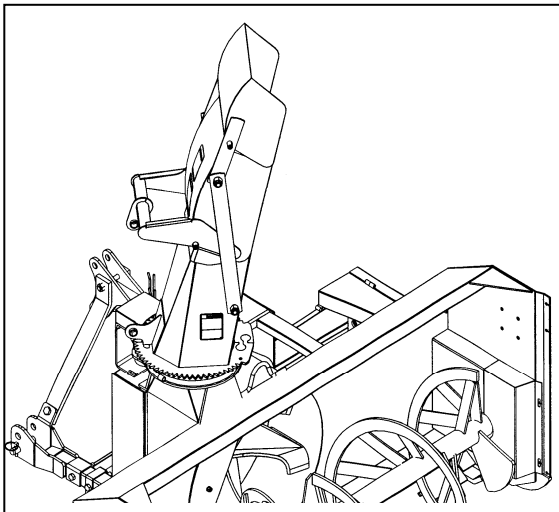

SEMI-INDUSTRIAL CHUTE – 8169B

CUTTING EDGES
SKID SHOES
QUICK DISCONNECT YOKES
DRIVELINE SERIES 9 - 8032

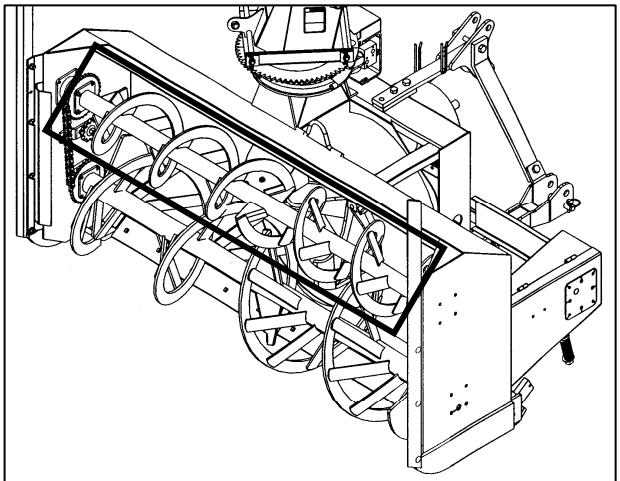

SECOND AUGER KIT – 8049 / 8050

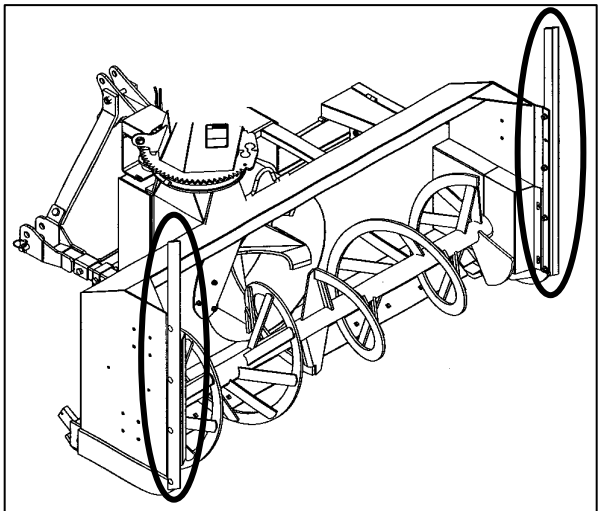

VERTICAL KNIVES - 8099

WARRANTY

RADTECH warrants to the original buyer that the equipment is free from defects in material and workmanship. RADTECH's obligation, under this warranty, will be limited to the repair or replacement of any non-wear part or component, which RADTECH finds to be defective within **one year** from the date of original purchase (unless otherwise-specified). The applicable warranty period for commercial or rental use shall be ninety (90) days from the date of purchase

In no event shall RADTECH be liable for consequential, special, direct or indirect damages incurred by the buyer/user.

All components not manufactured by RADTECH (such as motors, actuators, hydraulic components, tires, ...etc.) are covered by the original manufacturer's warranty in conjunction with RADTECH

RADTECH's obligation under this warranty shall be limited to repairing or replacing, free of charge to the original purchaser, any part that, in RADTECH's judgment, shall show evidence of such defect, provided the **distributor** returns the part prepaid within thirty (30) days from date of failure.

This warranty shall not be interpreted to render RADTECH liable for injuries or damages of any kind or nature to person or property. This warranty does not extend to losses because of delays, or to any expenses or losses incurred for labor, substitute machinery, rental or for any other reason.

Except as set forth above, RADTECH shall have no obligation or liability of any kind on account of any of its equipment and shall not be liable for special or consequential damages. RADTECH makes no other warranty, expressed or implied, and specifically, RADTECH disclaims any implied warranty or merchantability or fitness for a particular purpose**. Some states or provinces do not permit limitations or exclusions of implied warranties or incidental or consequential damages, so the limitations or exclusions in this warranty may not apply.**

This warranty is subject to any existing conditions of supply, which may directly affect our ability to obtain materials or manufacture replacement parts. RADTECH reserves the right to make improvements in design or changes in specifications at any time, without incurring any obligation to owners of units previously sold.

No one is authorized to alter, modify or enlarge this warranty nor the exclusions, limitations and reservations.

2835 Chemin de l'Aéroport, Thetford Mines (Québec) G6G 5R7

Tel.: (418) 338-4499 Fax: (418) 388-6090
Internet : www.radinter.com e-mail : radtech@radinter.com

TORQUE SPECIFICATION TABLE

GENERAL SPECIFICATION TABLE Use the following torques when special torques are not given Note: These values apply to fasteners as received from supplier, when dry. These values do not apply if lubricants are used.		
BOLT SIZES (SAE)	**TORQUE**	
INCHES	**Pounds-Foot**	**Newtons-Meter**
1/4	5	7
5/16	10	14
3/8	20	27
7/16	25	41
1/2	88	119
9/16	121	144
5/8	145	224
3/4	297	403
7/8	440	597
1	638	865
1 1/8	840	1139
1 1/4	1180	1400
1 3/8	1570	2129
1 1/2	2070	2807

BOLT SIZES (METRIC)	**TORQUE**	
MILLIMETERS	**Pounds-Foot**	**Newtons-Meter**
M6	10	13
M8	22	30
M10	40	54
M12	59	80
M14	93	126
M14	130	176
M18	148	228
M20	205	278

Manufactured by:

RADTECH
Division of RAD Technologies Inc.
2835, Chemin de l'Aéroport
Thetford Mines, Québec, Canada, G6G 5R7
Tel.: (418) 338-4499 - Fax: (418) 338-6090
e-mail : radtech@radinter.com
Internet : www.radinter.com

Printed in Canada